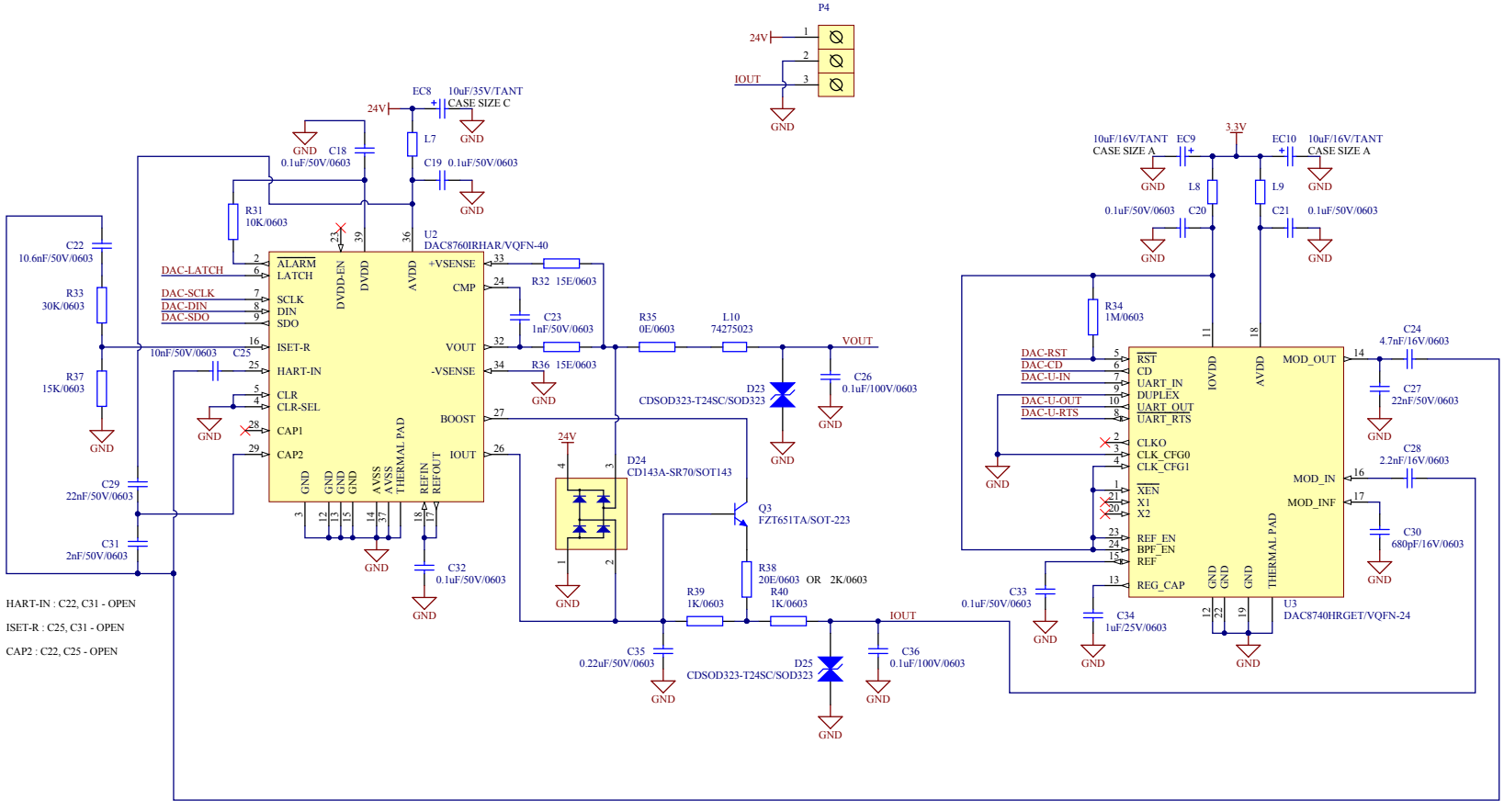HART TRANSMITTER SECTION