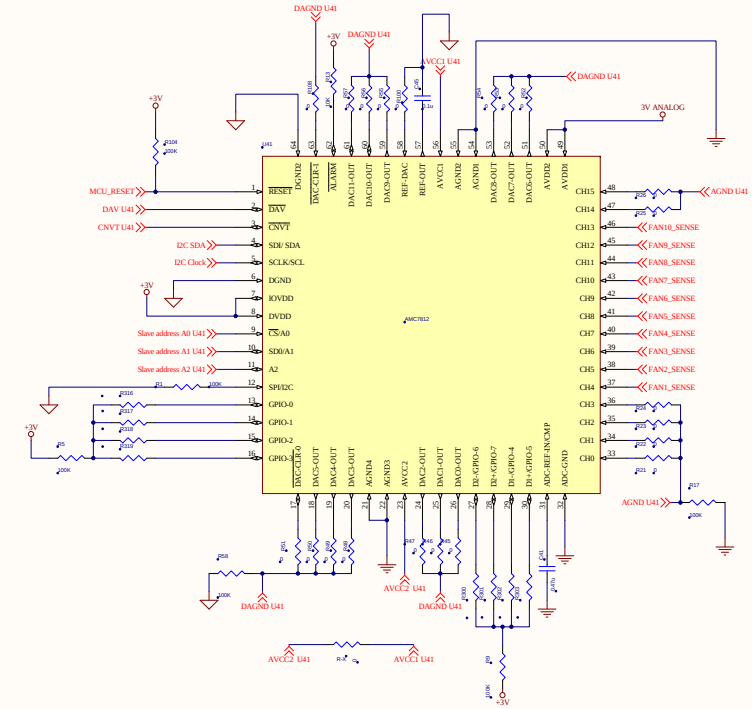

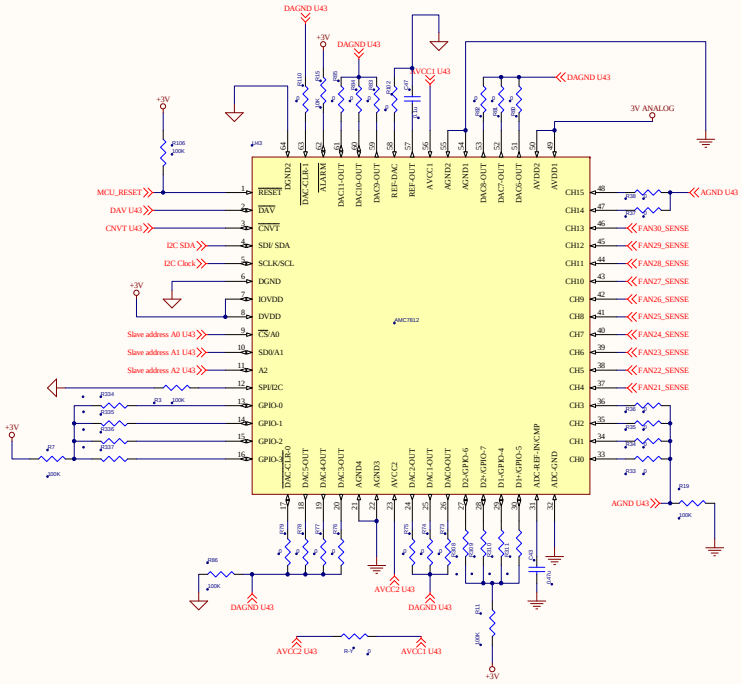

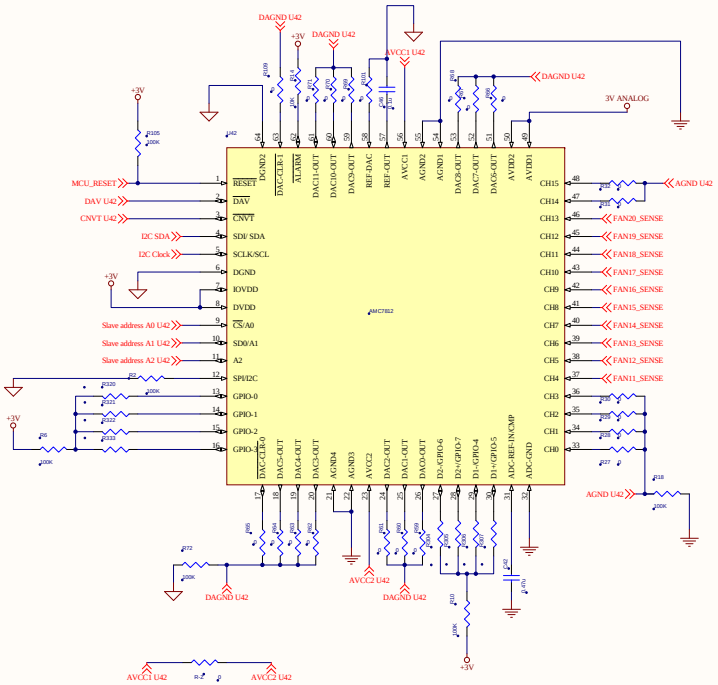

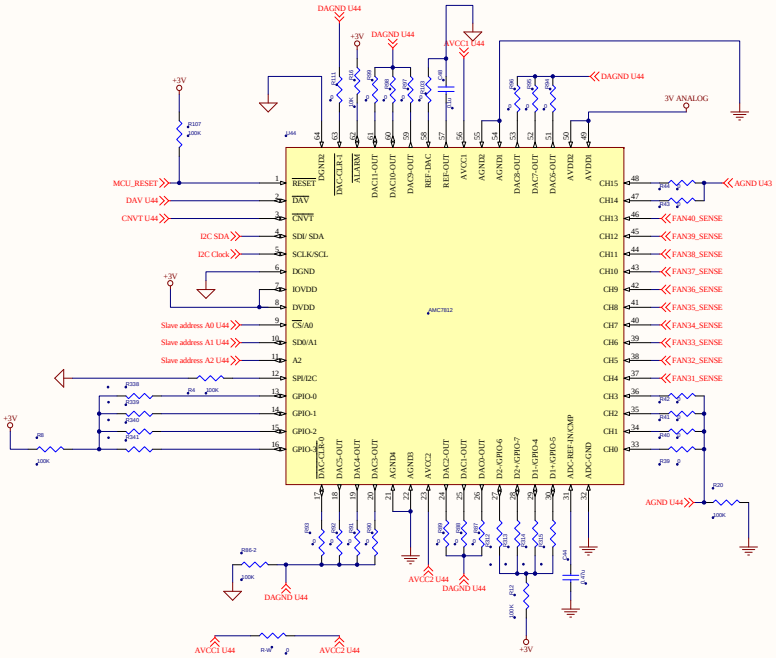

Title			
Size	Document Number		Rev
Date:		Sheet of	