Power Groups

Sequencing Requirement

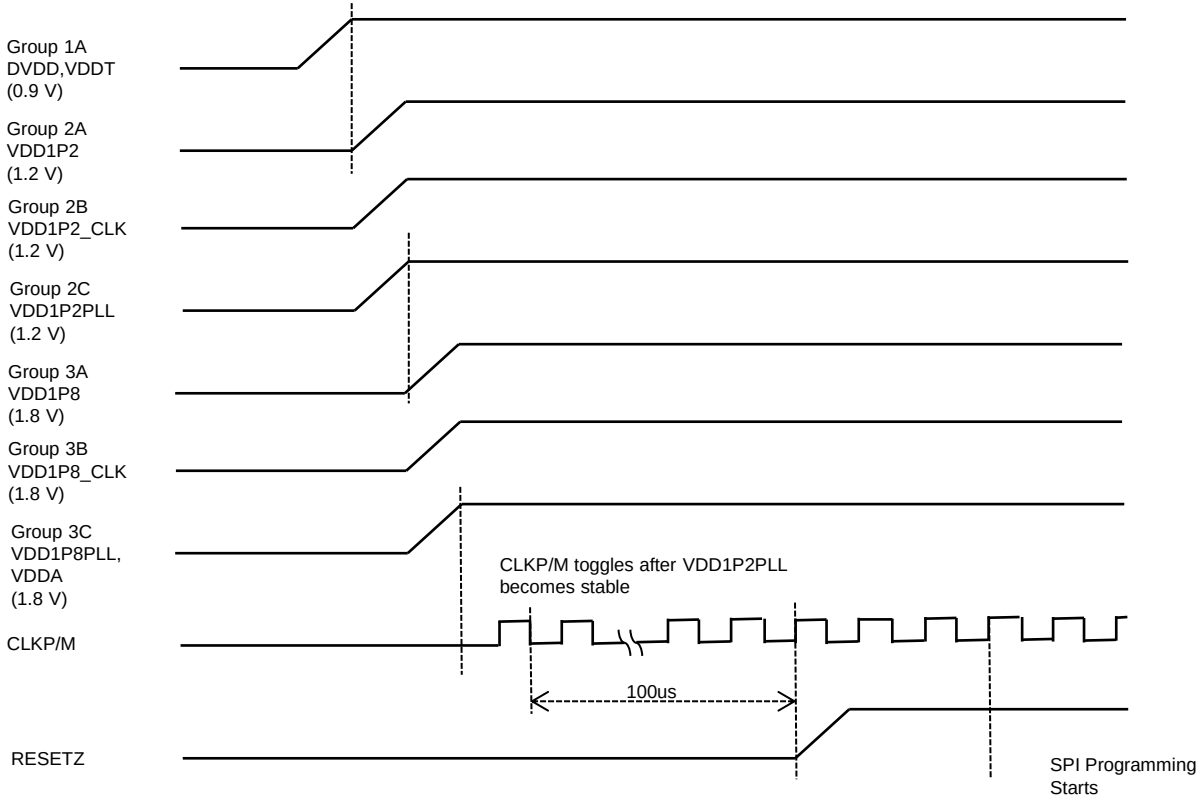

Texas Instruments

1x Block Diagram : Power Grouping

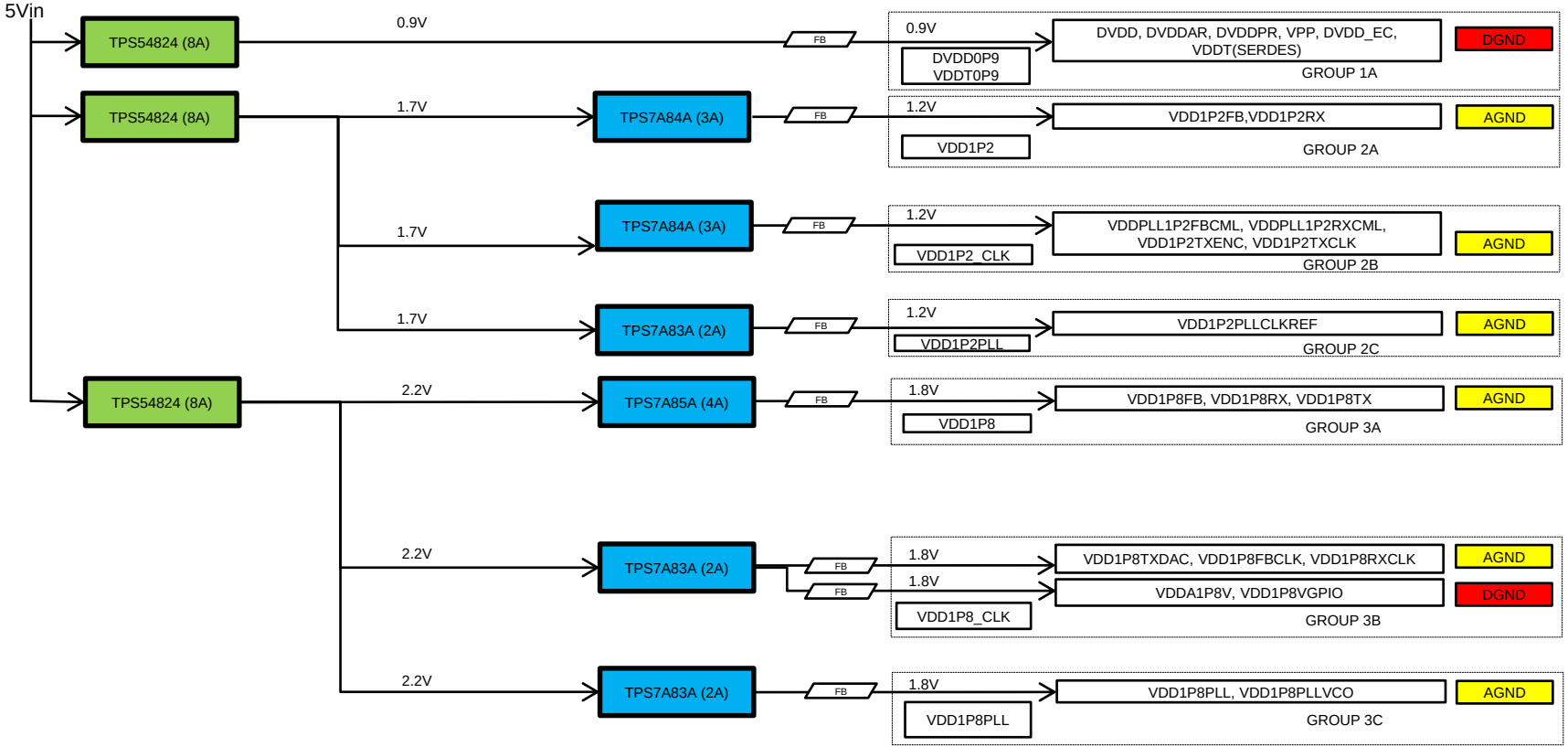

Texas Instruments