RTD TO DIGITAL CONVERTER - ADS124S08IRHBR

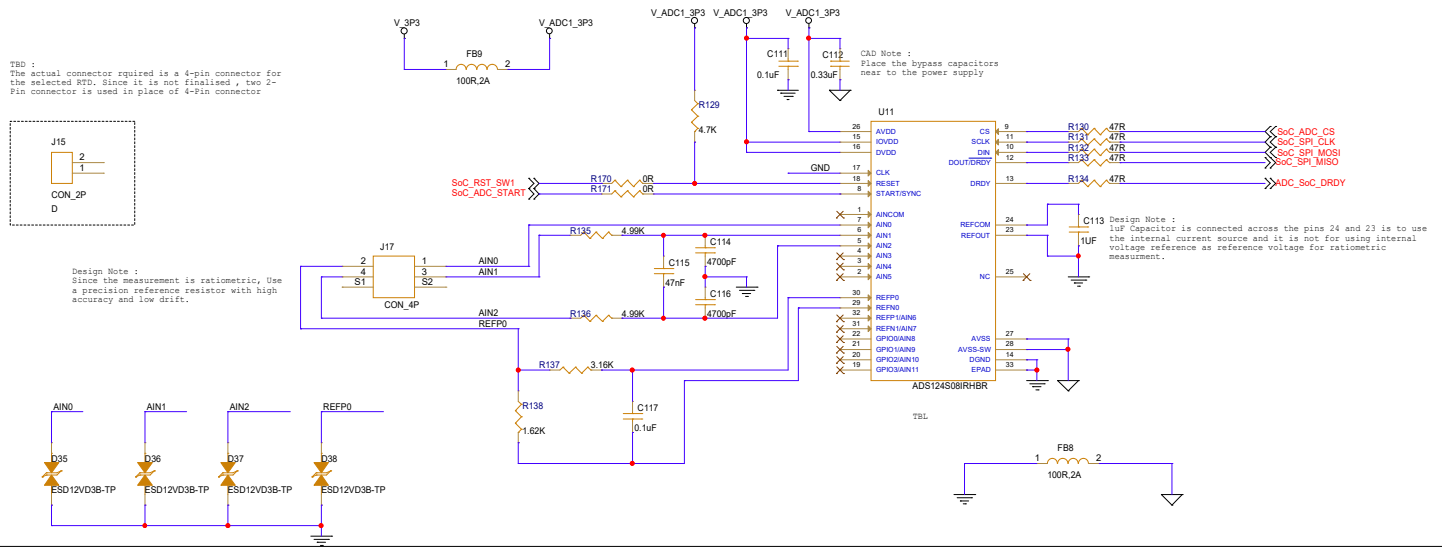

THERMOCOUPLE TO DIGITAL CONVERTER - ADS124S08IRHBR

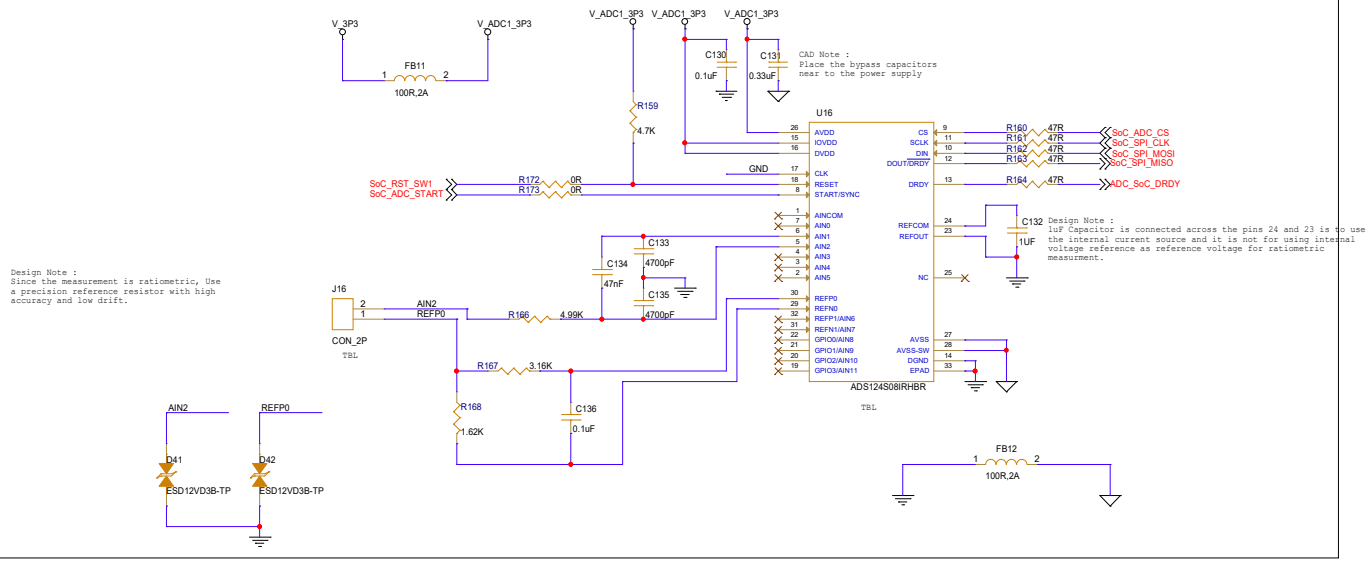

Title	RTD TO DIGITAL CONVERTER	
Size C	Document Number <Doc>	Rev A
Date: Tuesday, April 30, 2024	Sheet 7 of 13	