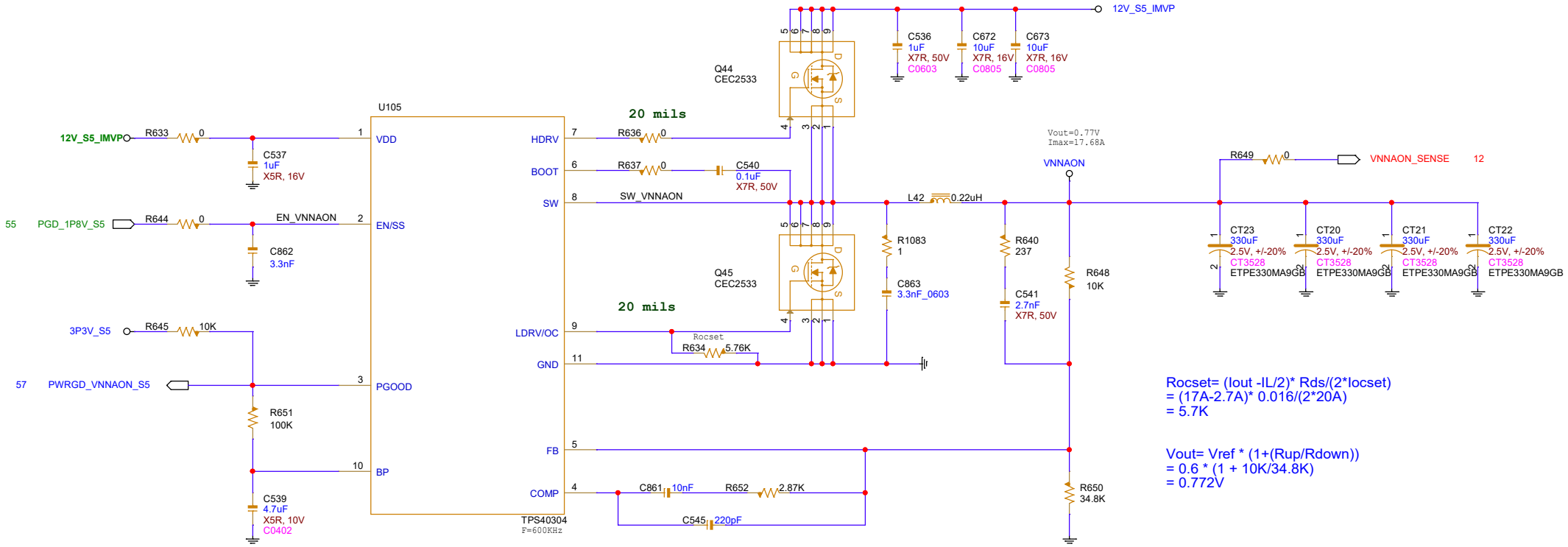

APLEX Technology

Title

56-PWR7: VNNAON_S5

Size	Document Number	Rev
B	SBC-7133	R0.2

Date: Tuesday, June 03, 2025 Sheet 56 of 66