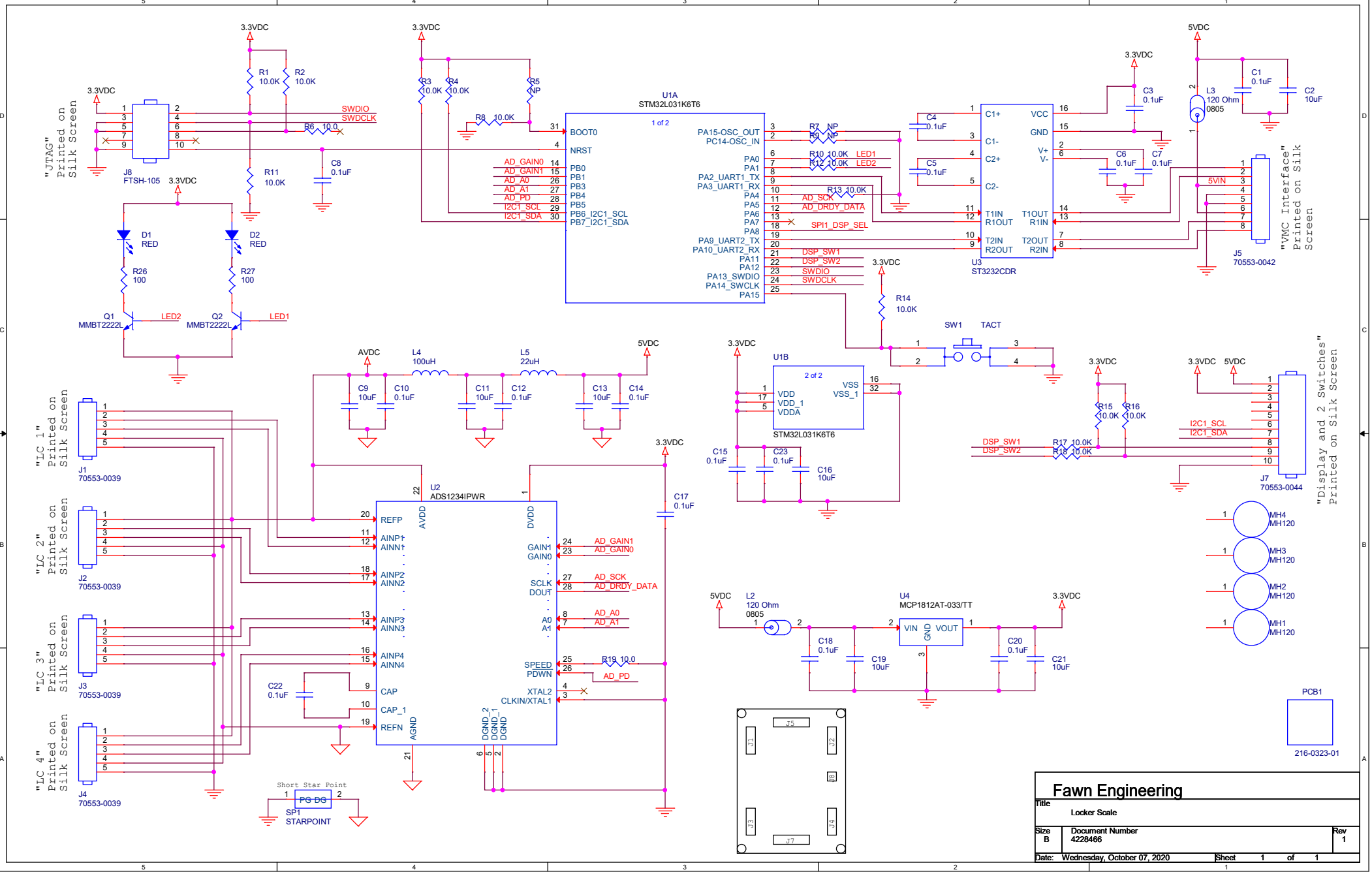
"JTAG" Printed on Silk Screen
J8
FTSH-105
3.3VDC
R1 10.0K
R2 10.0K
R11 10.0K
C8 0.1uF
SWDIO
SWDCLK
R6 10.0
D1 RED
D2 RED
R26 100
R27 100
Q1 MMBT2222L
Q2 MMBT2222L
LED2
LED1
R3 10.0K
R4 10.0K
R5 NP
R8 10.0K
U1A
STM32L031K6T6
1 of 2
BOOT0
NRST
PB0
PB1
PB3
PB4
PB5
PB6_I2C1_SCL
PB7_I2C1_SDA
AD_GAIN0
AD_GAIN1
AD_A0
AD_A1
AD_PD
I2C1_SCL
I2C1_SDA
PA15-OSC_OUT
PC14-OSC_IN
PA0
PA1
PA2_UART1_TX
PA3_UART1_RX
PA4
PA5
PA6
PA7
PA8
PA9_UART2_TX
PA10_UART2_RX
PA11
PA12
PA13_SWDIO
PA14_SWCLK
PA15
R7 NP
R9 NP
R10 10.0K
R12 10.0K
R13 10.0K
AD_SCK
AD_DRDY_DATA
SPI1_DSP_SEL
DSP_SW1
DSP_SW2
SWDIO
SWDCLK
C4 0.1uF
C5 0.1uF
U3
ST3232CDR
C1+
C1-
C2+
C2-
T1IN
R1OUT
T2IN
R2OUT
VCC
GND
V+
V-
T1OUT
R1IN
T2OUT
R2IN
C3 0.1uF
C6 0.1uF
C7 0.1uF
5VDC
C1 0.1uF
C2 10uF
L3 120 Ohm 0805
5VIN
J5
70553-0042
"VMC Interface" Printed on Silk Screen
R14 10.0K
SW1
TACT
U1B
2 of 2
VDD
VDD_1
VDDA
VSS
VSS_1
STM32L031K6T6
C15 0.1uF
C23 0.1uF
C16 10uF
AVDD
L4 100uH
L5 22uH
C9 10uF
C10 0.1uF
C11 10uF
C12 0.1uF
C13 10uF
C14 0.1uF
"LC 1" Printed on Silk Screen
J1
70553-0039
"LC 2" Printed on Silk Screen
J2
70553-0039
"LC 3" Printed on Silk Screen
J3
70553-0039
"LC 4" Printed on Silk Screen
J4
70553-0039
U2
ADS1234IPWR
REFP
AINP1
AINN1
AINP2
AINN2
AINP3
AINN3
AINP4
AINN4
CAP
CAP_1
REFN
AVDD
AGND
DVDD
GAIN1
GAIN0
SCLK
DOUT
A0
A1
SPEED
PDWN
XTAL2
CLKIN/XTAL1
DGND_2
DGND_1
DGND
C22 0.1uF
C17 0.1uF
R19 10.0
Short Star Point
PG DG
SP1
STARPOINT
R15 10.0K
R16 10.0K
R17 10.0K
R18 10.0K
J7
70553-0044
"Display and 2 Switches" Printed on Silk Screen
MH4 MH120
MH3 MH120
MH2 MH120
MH1 MH120
L2 120 Ohm 0805
U4
MCP1812AT-033/TT
VIN
GND
VOUT
C18 0.1uF
C19 10uF
C20 0.1uF
C21 10uF
PCB1
216-0323-01
Fawn Engineering
Title
Locker Scale
Size B
Document Number 4228466
Rev 1
Date: Wednesday, October 07, 2020
Sheet 1 of 1