Ratiometric design (EXC+ & VREFP from 3XAA 1.5Volt)

C19 is optional

Load cell are connected through 60cm cable

Ferrites and Resistors are not used as this is low noise battery powered application

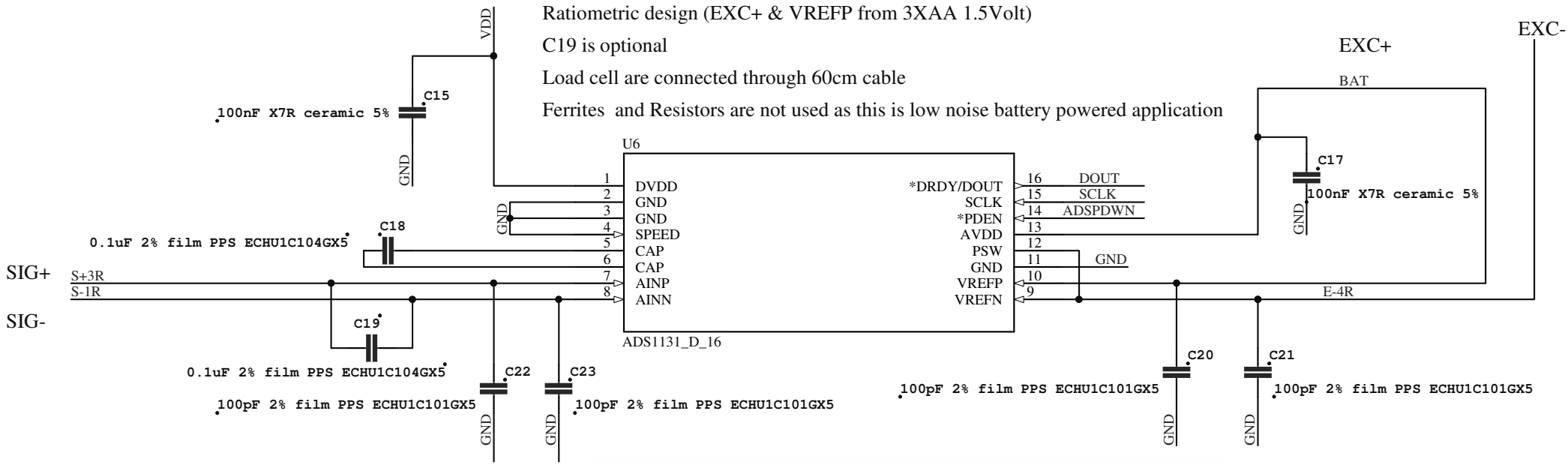

Are there any suggestions ?
What about C21 ?
VREFN is tied to PSW. I assume that VREFN is grounded through PSW.
(I make use of the PDEN to reduce consumption)