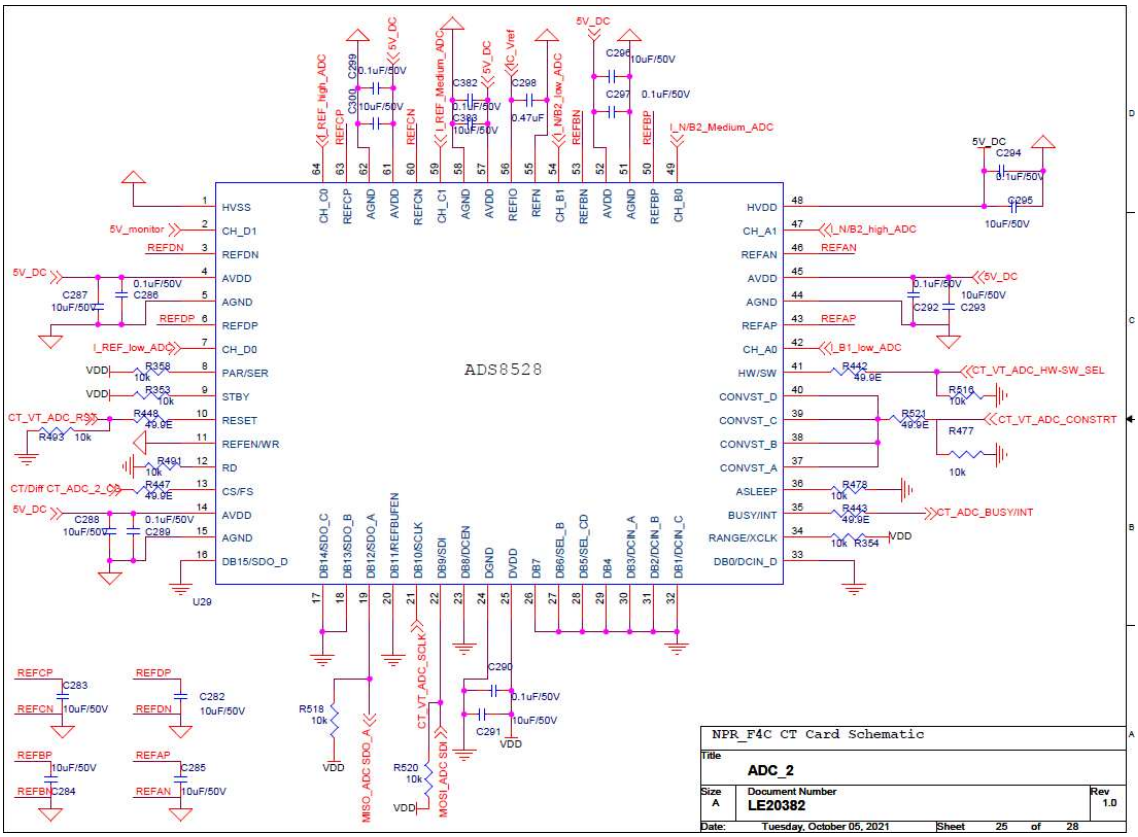
ADS8528
U29
HVSS
CH_D1
REFDN
AVDD
AGND
REFDP
CH_D0
PAR/SER
STBY
RESET
REFEN/WR
RD
CS/FS
AVDD
AGND
DB15/SDO_D
HVDD
CH_A1
REFAN
AVDD
AGND
REFAP
CH_A0
HW/SW
CONVST_D
CONVST_C
CONVST_B
CONVST_A
ASLEEP
BUSY/INT
RANGE/XCLK
DB0/DCIN_D
NPR_F4C CT Card Schematic
Title
ADC_2
Size
A
Document Number
LE20382
Rev
1.0
Date: Tuesday, October 05, 2021
Sheet 25 of 28

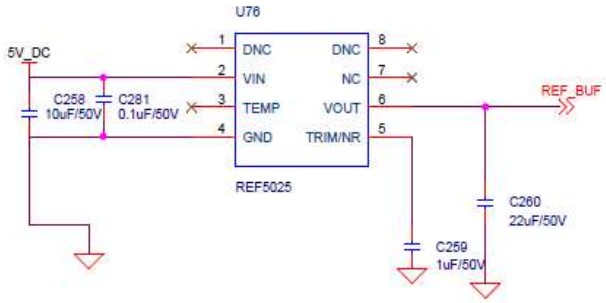
U76
5V_DC
DNC
VIN
TEMP
GND
DNC
NC
VOUT
TRIM/NR
REF5025
C258
10uF/50V
C281
0.1uF/50V
REF_BUF
C260
22uF/50V
C259
1uF/50V

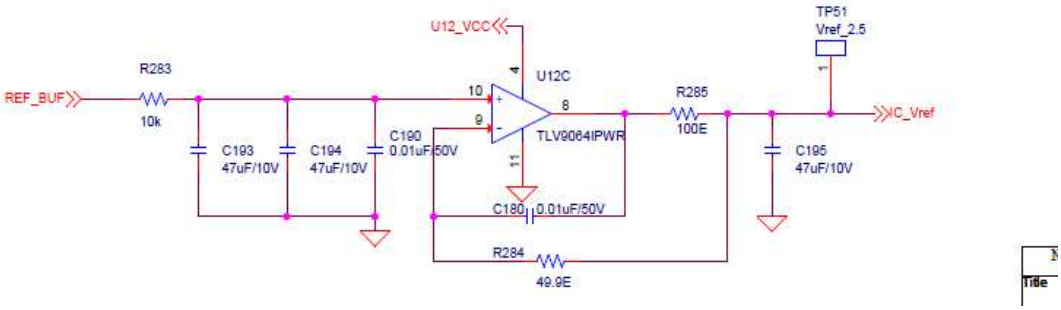
U12_VCC
TP51
Vref_2.5
R283
REF_BUF
10k
U12C
TLV9064IPWR
R285
100E
C_Vref
C193
47uF/10V
C194
47uF/10V
C190
0.01uF/50V
C180
0.01uF/50V
C195
47uF/10V
R284
49.9E
Title

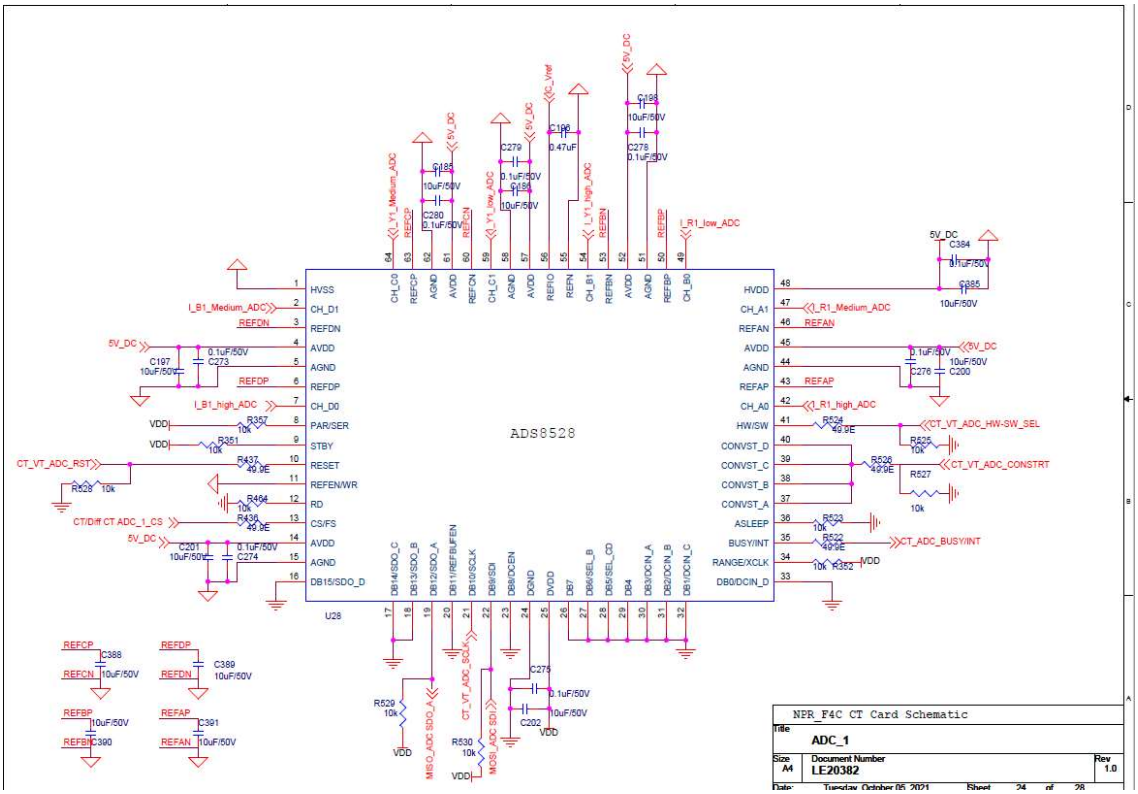
AD8528
U28
NPR_F4C CT Card Schematic
ADC_1
LE20382
Tuesday, October 05, 2021
Sheet 24 of 28

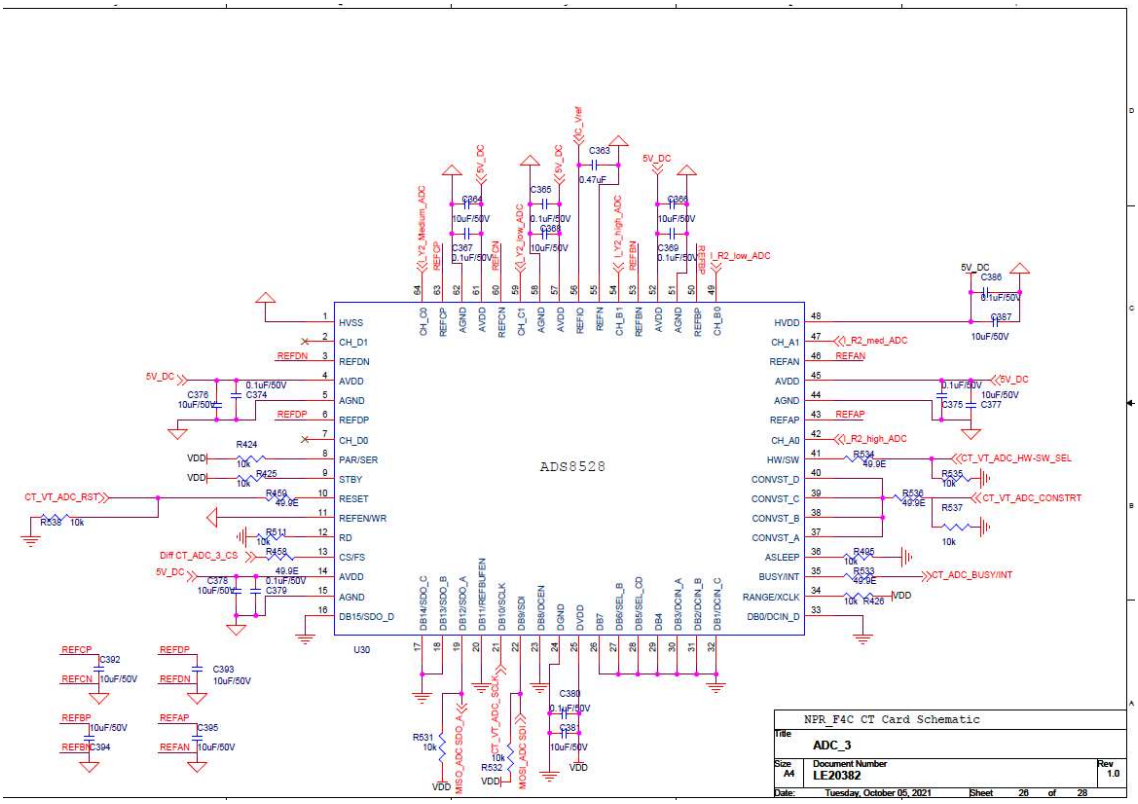
AD8528
U30
NPR_F4C CT Card Schematic
ADC_3
LE20382
Tuesday, October 05, 2021
Sheet 26 of 28