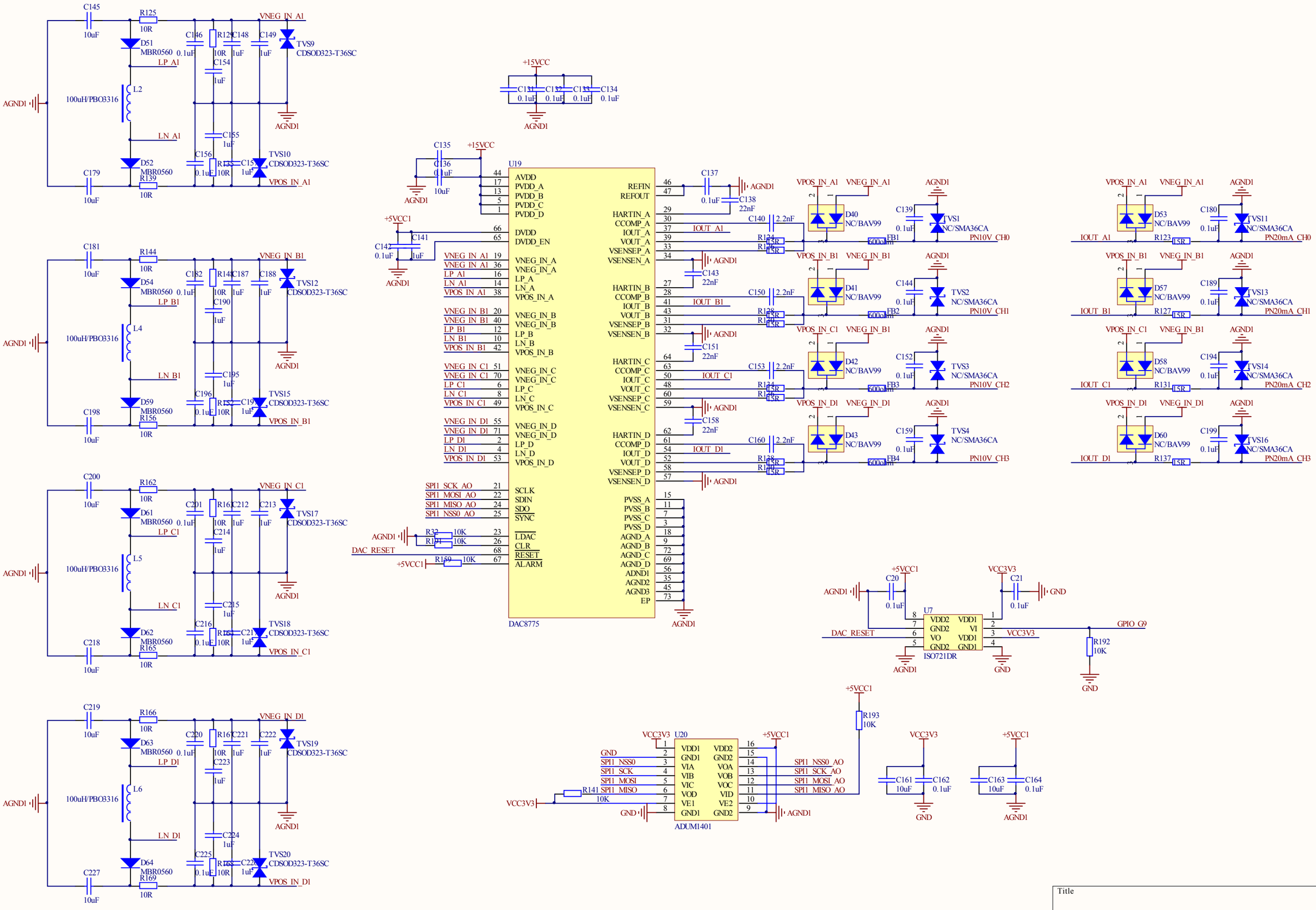

Title		
Size A3	Number	Revision
Date: 2018/6/29		Sheet of
File: E:\ \..\Sheet_Con.SchDoc		Drawn By: