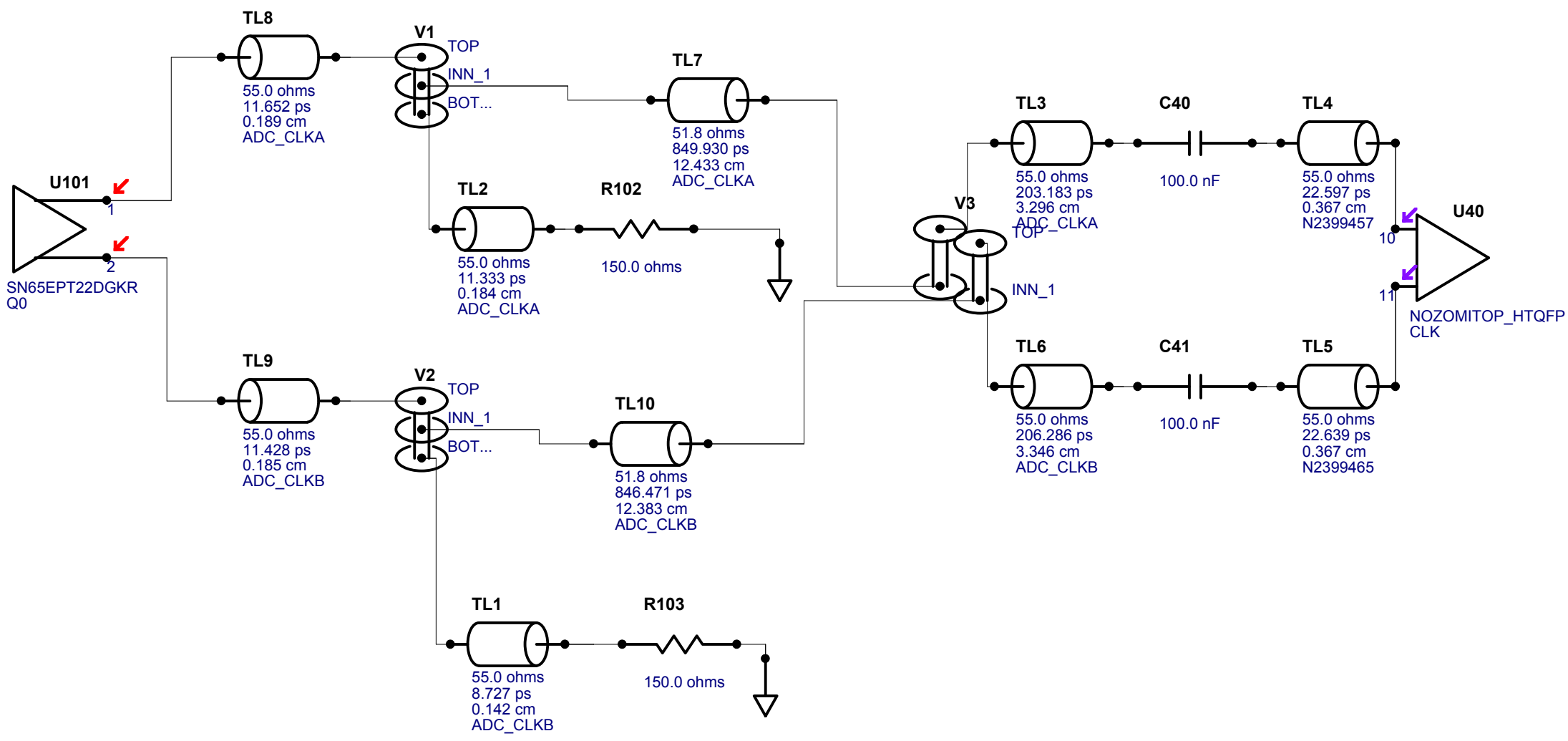
TL8
55.0 ohms
11.652 ps
0.189 cm
ADC_CLKA
V1
TOP
INN_1
BOT...
TL7
51.8 ohms
849.930 ps
12.433 cm
ADC_CLKA
U101
1
2
SN65EPT22DGKR
Q0
TL2
R102
55.0 ohms
11.333 ps
0.184 cm
ADC_CLKA
150.0 ohms
TL3
C40
TL4
55.0 ohms
203.183 ps
3.296 cm
ADC_CLKA
100.0 nF
55.0 ohms
22.597 ps
0.367 cm
N2399457
V3
TOP
INN_1
U40
10
11
NOZOMITOP_HTQFP
CLK
TL9
55.0 ohms
11.428 ps
0.185 cm
ADC_CLKB
V2
TOP
INN_1
BOT...
TL10
51.8 ohms
846.471 ps
12.383 cm
ADC_CLKB
TL6
C41
TL5
55.0 ohms
206.286 ps
3.346 cm
ADC_CLKB
100.0 nF
55.0 ohms
22.639 ps
0.367 cm
N2399465
TL1
R103
55.0 ohms
8.727 ps
0.142 cm
ADC_CLKB
150.0 ohms