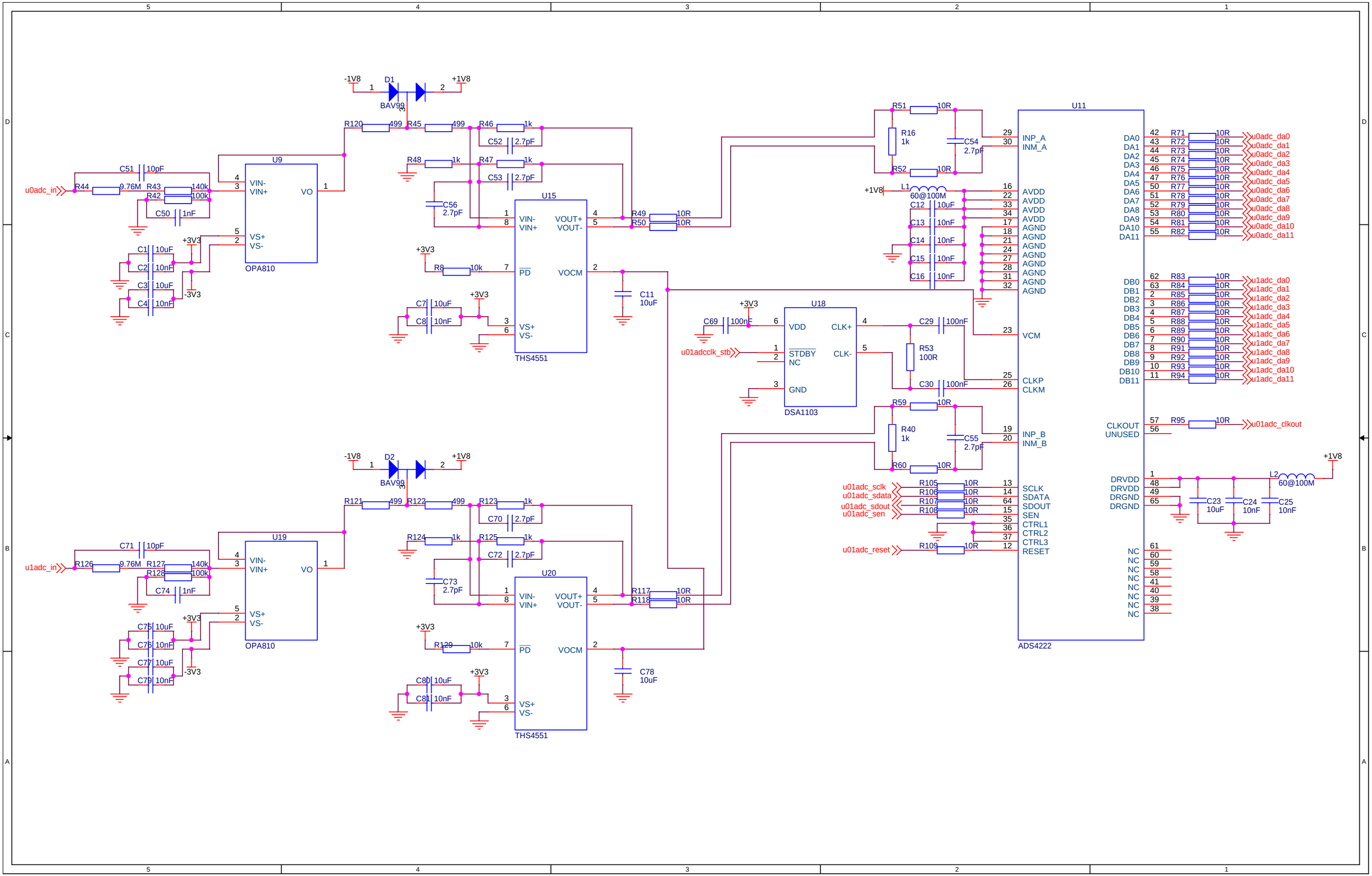
u0adc_in
R44 9.76M
C51 10pF
R43 140k
R42 100k
C50 1nF
U9
VIN-
VIN+
VO
VS+
VS-
OPA810
C1 10uF
C2 10nF
C3 10uF
C4 10nF
+3V3
-3V3
-1V8
D1
BAV99
+1V8
R120 499
R45 499
R46 1k
C52 2.7pF
R48 1k
R47 1k
C53 2.7pF
C56 2.7pF
U15
VOUT+
VOUT-
PD
VOCM
THS4551
R8 10k
C7 10uF
C8 10nF
R49 10R
R50 10R
C11 10uF
u1adc_in
R126 9.76M
C71 10pF
R127 140k
R128 100k
C74 1nF
U19
OPA810
C75 10uF
C76 10nF
C77 10uF
C79 10nF
D2
R121 499
R122 499
R123 1k
C70 2.7pF
R124 1k
R125 1k
C72 2.7pF
C73 2.7pF
U20
THS4551
R129 10k
C80 10uF
C81 10nF
R117 10R
R118 10R
C78 10uF
R51 10R
R16 1k
C54 2.7pF
R52 10R
L1 60@100M
C12 10uF
C13 10nF
C14 10nF
C15 10nF
C16 10nF
U18
VDD
CLK+
STDBY
NC
CLK-
GND
DSA1103
C69 100nF
u01adcclk_stb
C29 100nF
R53 100R
C30 100nF
R59 10R
R40 1k
C55 2.7pF
R60 10R
u01adc_sclk
u01adc_sdata
u01adc_sdout
u01adc_sen
u01adc_reset
R105 10R
R106 10R
R107 10R
R108 10R
R109 10R
U11
INP_A
INM_A
AVDD
AGND
VCM
CLKP
CLKM
INP_B
INM_B
SCLK
SDATA
SDOUT
SEN
CTRL1
CTRL2
CTRL3
RESET
DA0
DA1
DA2
DA3
DA4
DA5
DA6
DA7
DA8
DA9
DA10
DA11
R71 10R
R72 10R
R73 10R
R74 10R
R75 10R
R76 10R
R77 10R
R78 10R
R79 10R
R80 10R
R81 10R
R82 10R
u0adc_da0
u0adc_da1
u0adc_da2
u0adc_da3
u0adc_da4
u0adc_da5
u0adc_da6
u0adc_da7
u0adc_da8
u0adc_da9
u0adc_da10
u0adc_da11
DB0
DB1
DB2
DB3
DB4
DB5
DB6
DB7
DB8
DB9
DB10
DB11
R83 10R
R84 10R
R85 10R
R86 10R
R87 10R
R88 10R
R89 10R
R90 10R
R91 10R
R92 10R
R93 10R
R94 10R
u1adc_da0
u1adc_da1
u1adc_da2
u1adc_da3
u1adc_da4
u1adc_da5
u1adc_da6
u1adc_da7
u1adc_da8
u1adc_da9
u1adc_da10
u1adc_da11
CLKOUT
UNUSED
R95 10R
u01adc_clkout
DRVDD
DRGND
L2 60@100M
C23 10uF
C24 10nF
C25 10nF
NC
ADS4222