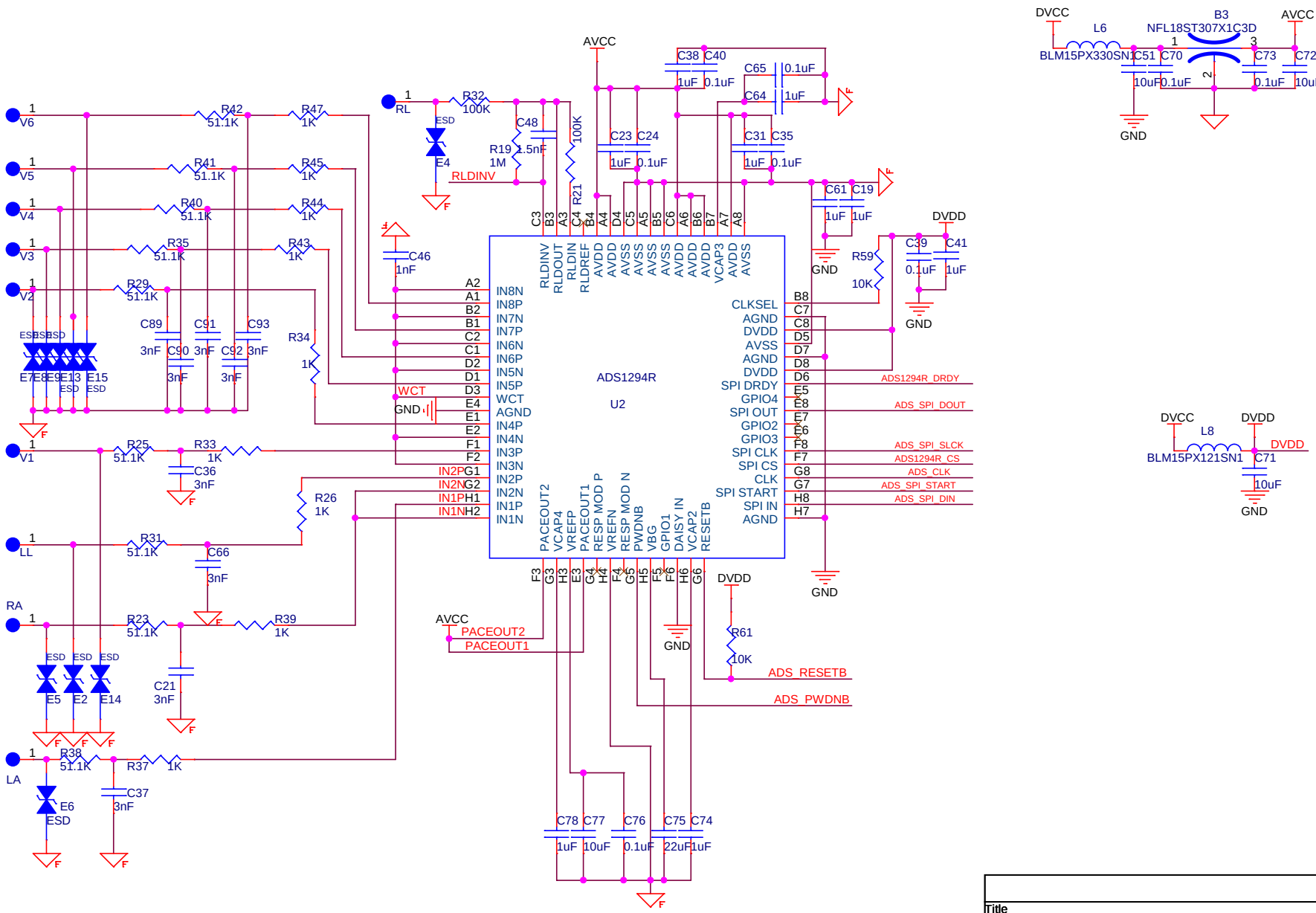

Title	YS-MBM12B-V1.0	
Size A4	Document Number <Doc>	Rev 1.0
Date:	Sheet 3 of 4	