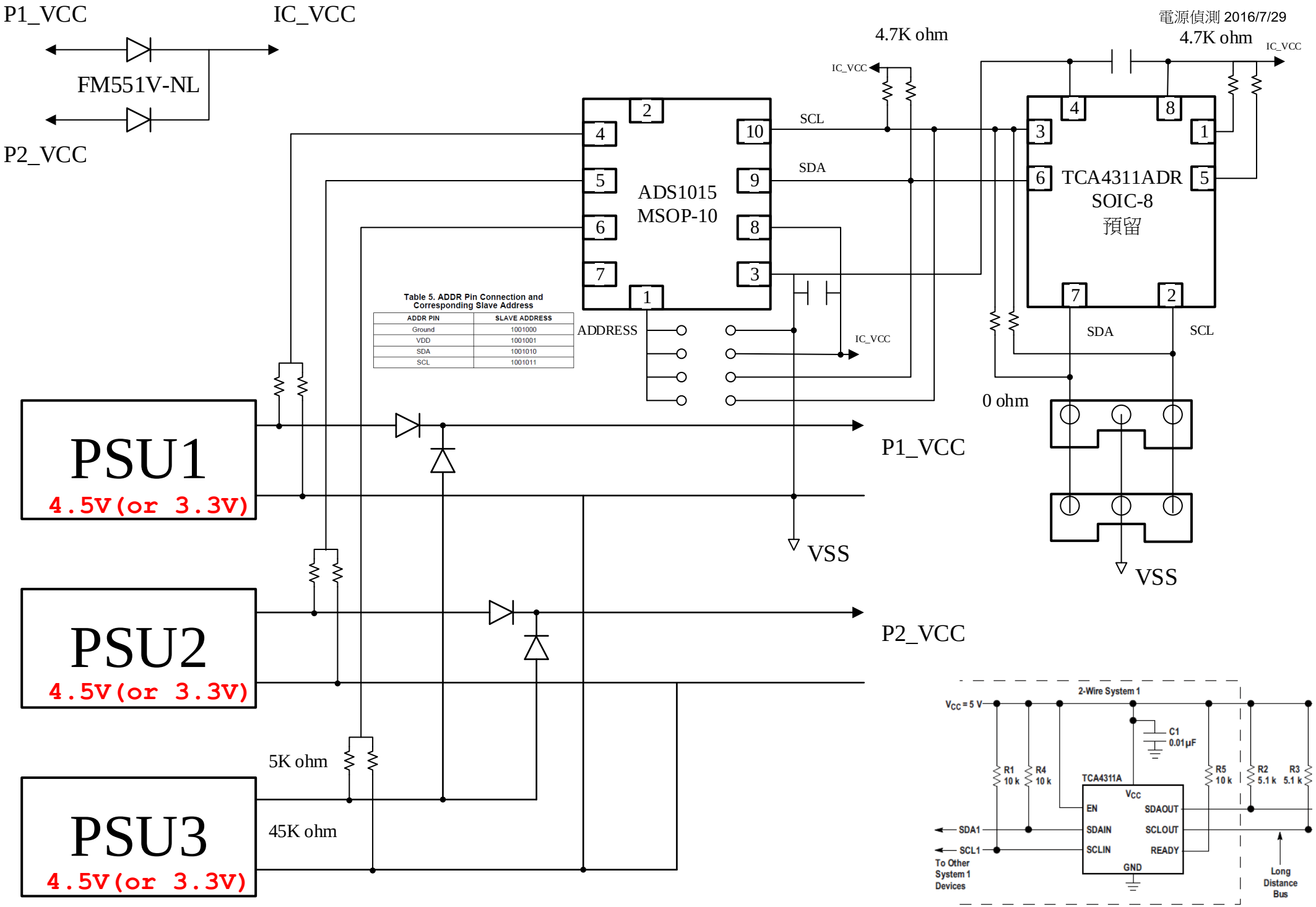

Table 5. ADDR Pin Connection and Corresponding Slave Address

ADDR PIN	SLAVE ADDRESS
Ground	1001000
VDD	1001001
SDA	1001010
SCL	1001011