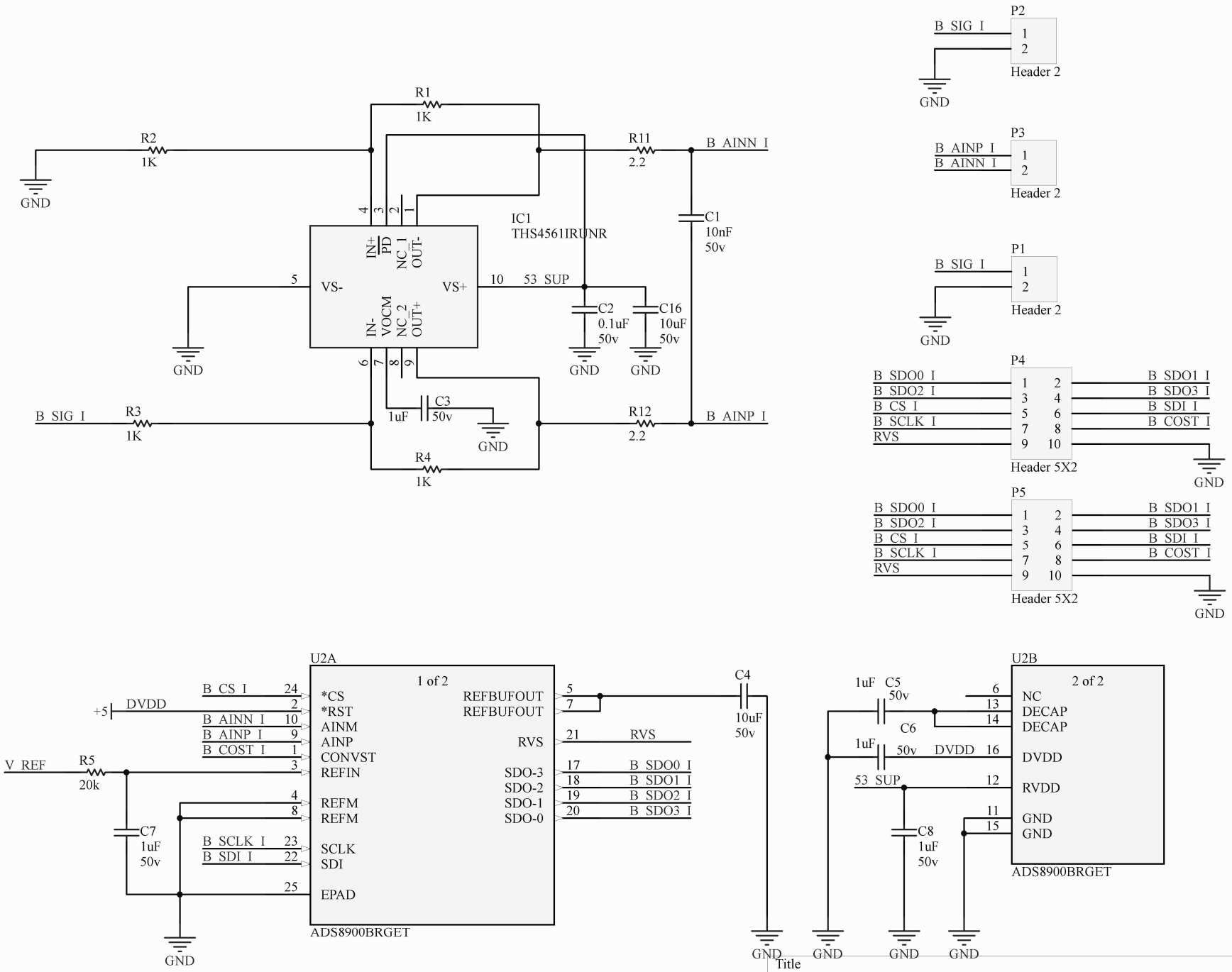

Title		
Size A	Number	Revision
Date: 6/27/2022	Sheet of	
File: F:\20BIT_ADC_EVAL\..\adc_and_sig_chain.SchDoc	Drawn By:	