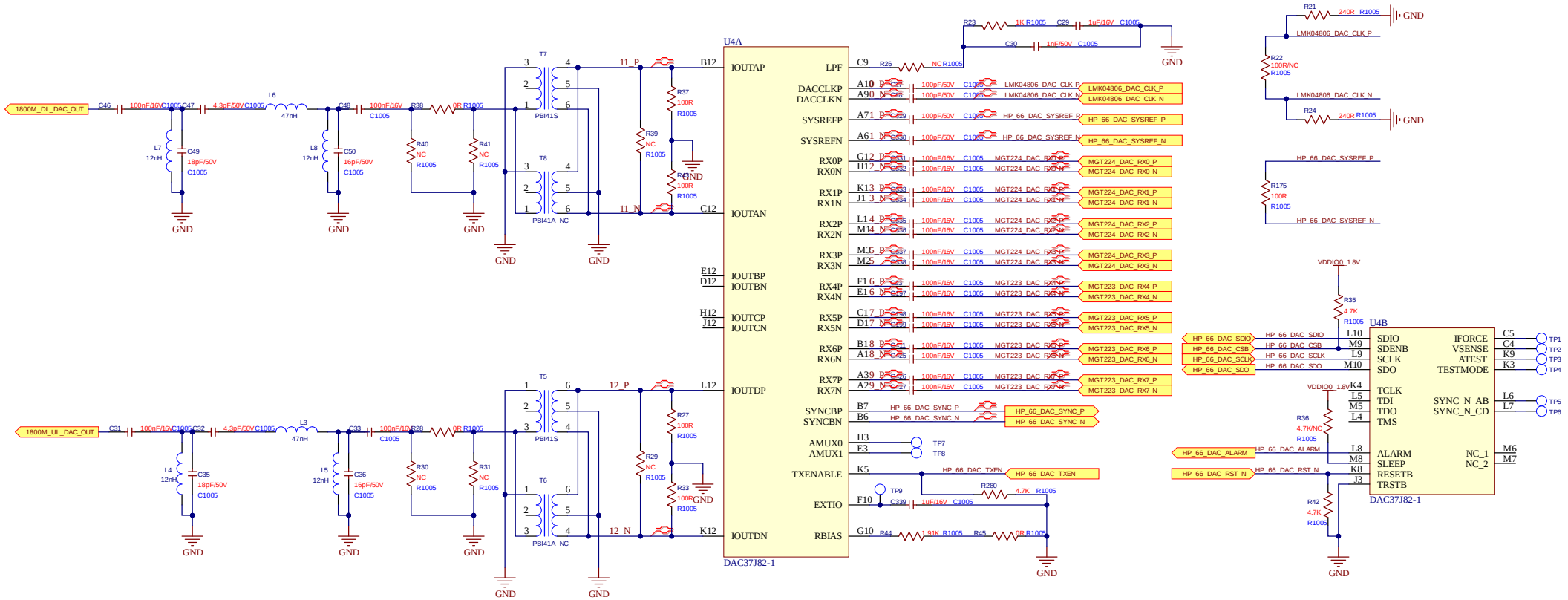
1800M_DL_DAC_OUT
C46 100nF/16V C1005
C47 4.3pF/50V C1005
L6 47nH
C48 100nF/16V C1005
R39 0R R1005
L7 12nH
C49 18pF/50V C1005
L8 12nH
C50 16pF/50V C1005
R40 NC R1005
R41 NC R1005
T7 PBI41S
T8 PBI41A_NC
11_P
11_N
B12
C12
R37 100R R1005
R39 NC R1005
R38 100R R1005
GND
1800M_UL_DAC_OUT
C31 100nF/16V C1005
C32 4.3pF/50V C1005
L3 47nH
C33 100nF/16V C1005
R28 0R R1005
L4 12nH
C35 18pF/50V C1005
L5 12nH
C36 16pF/50V C1005
R30 NC R1005
R31 NC R1005
T5 PBI41S
T6 PBI41A_NC
12_P
12_N
L12
K12
R27 100R R1005
R29 NC R1005
R33 100R R1005
U4A
DAC37J82-1
IOUTAP
IOUTAN
IOUTBP
IOUTBN
IOUTCP
IOUTCN
IOUTDP
IOUTDN
LPF
DACCLKP
DACCLKN
SYSREFP
SYSREFN
RX0P
RX0N
RX1P
RX1N
RX2P
RX2N
RX3P
RX3N
RX4P
RX4N
RX5P
RX5N
RX6P
RX6N
RX7P
RX7N
SYNCBP
SYNCBN
AMUX0
AMUX1
TXENABLE
EXTIO
RBIAS
C9
R26 NC R1005
R23 1K R1005
C29 1uF/16V C1005
C30 1nF/50V C1005
A10
A9
A7
A6
G12
H12
K13
J13
L14
M14
M3
M2
F16
E16
C17
D17
B18
A18
A39
A29
B7
B6
H3
E3
K5
F10
G10
TP7
TP8
TP9
C339 1uF/16V C1005
R280 4.7K R1005
R44 1.91K R1005
R45 0R R1005
LMK04806_DAC_CLK_P
LMK04806_DAC_CLK_N
HP_66_DAC_SYSREF_P
HP_66_DAC_SYSREF_N
MGT224_DAC_RX0_P
MGT224_DAC_RX0_N
MGT224_DAC_RX1_P
MGT224_DAC_RX1_N
MGT224_DAC_RX2_P
MGT224_DAC_RX2_N
MGT224_DAC_RX3_P
MGT224_DAC_RX3_N
MGT223_DAC_RX4_P
MGT223_DAC_RX4_N
MGT223_DAC_RX5_P
MGT223_DAC_RX5_N
MGT223_DAC_RX6_P
MGT223_DAC_RX6_N
MGT223_DAC_RX7_P
MGT223_DAC_RX7_N
HP_66_DAC_SYNC_P
HP_66_DAC_SYNC_N
HP_66_DAC_TXEN
R21 240R R1005
R22 100R/NC R1005
R24 240R R1005
R175 100R R1005
VDDIO0 1.8V
R35 4.7K R1005
R36 4.7K/NC R1005
R42 4.7K R1005
U4B
DAC37J82-1
HP_66_DAC_SDIO
HP_66_DAC_CSB
HP_66_DAC_SCLK
HP_66_DAC_SDO
HP_66_DAC_ALARM
HP_66_DAC_RST_N
SDIO
SDENB
SCLK
SDO
TCLK
TDI
TDO
TMS
ALARM
SLEEP
RESETB
TRSTB
IFORCE
VSENSE
ATEST
TESTMODE
SYNC_N_AB
SYNC_N_CD
NC_1
NC_2
L10
M9
L9
M10
K4
L5
M5
L4
L8
M8
K8
J3
C5
C4
K9
K3
L6
L7
M6
M7
TP1
TP2
TP3
TP4
TP5
TP6