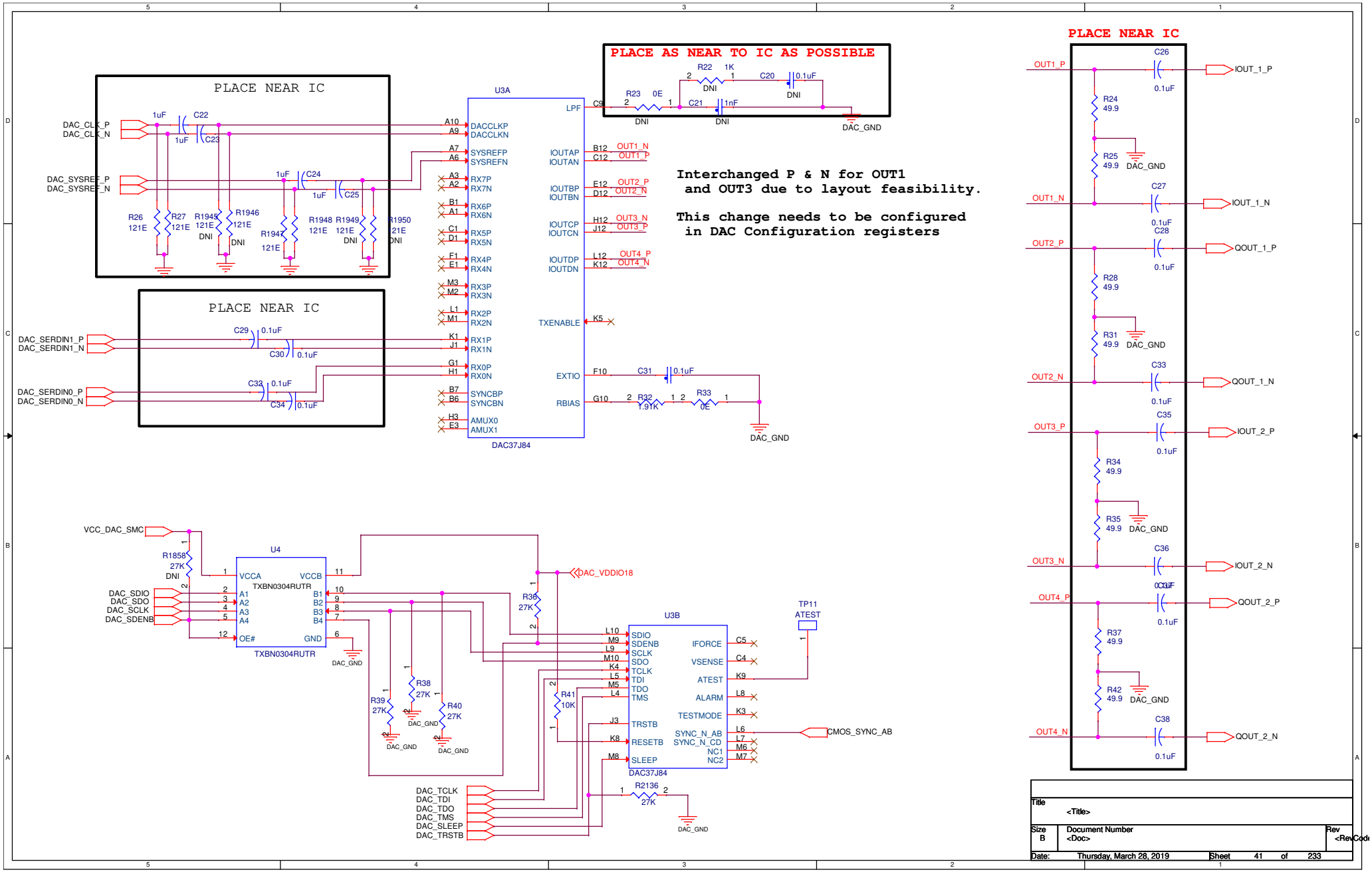

Title	<Title>	
Size B	Document Number <Doc>	Rev <RevCode>
Date: Thursday, March 28, 2019	Sheet 41 of 233	