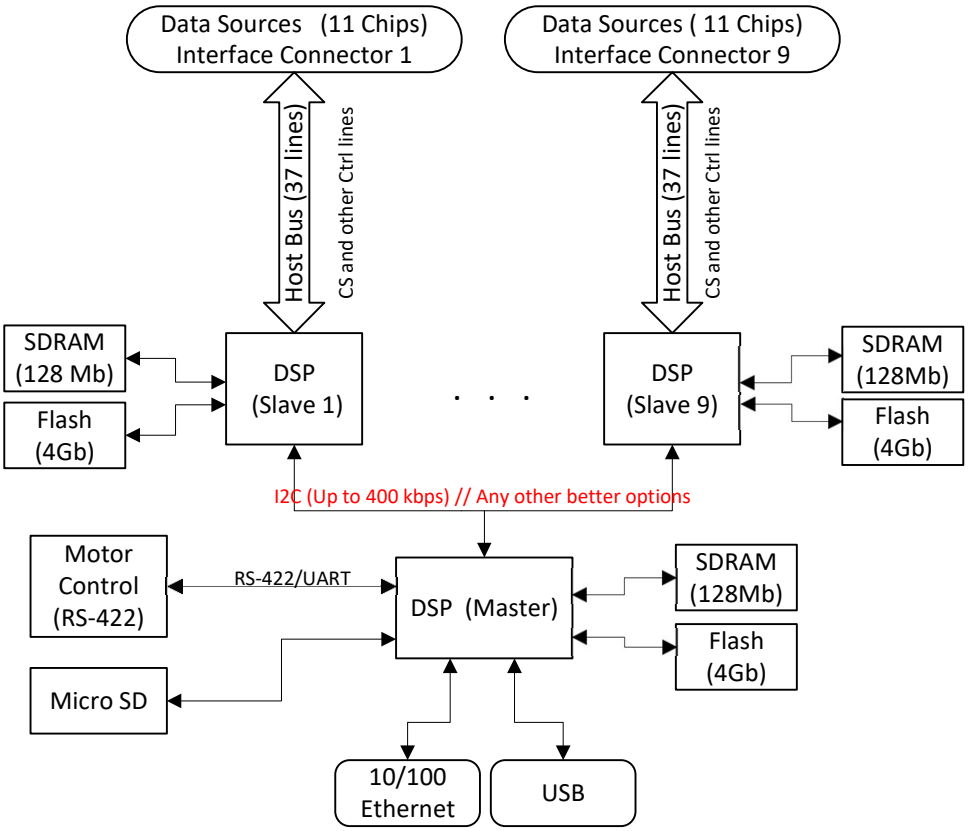
Data Sources (11 Chips)
Interface Connector 1
Data Sources (11 Chips)
Interface Connector 9
Host Bus (37 lines)
CS and other Ctrl lines
Host Bus (37 lines)
CS and other Ctrl lines
SDRAM
(128 Mb)
Flash
(4Gb)
DSP
(Slave 1)
. . .
DSP
(Slave 9)
SDRAM
(128Mb)
Flash
(4Gb)
I2C (Up to 400 kbps) // Any other better options
Motor
Control
(RS-422)
RS-422/UART
DSP (Master)
SDRAM
(128Mb)
Flash
(4Gb)
Micro SD
10/100
Ethernet
USB