HYPERLINK SECTION

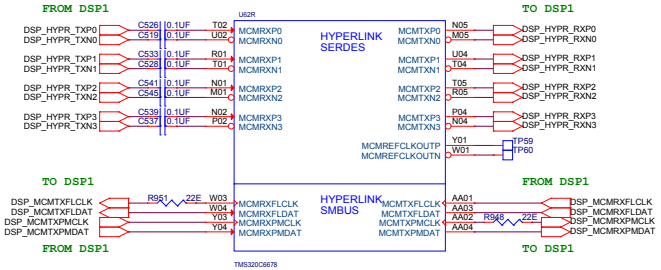

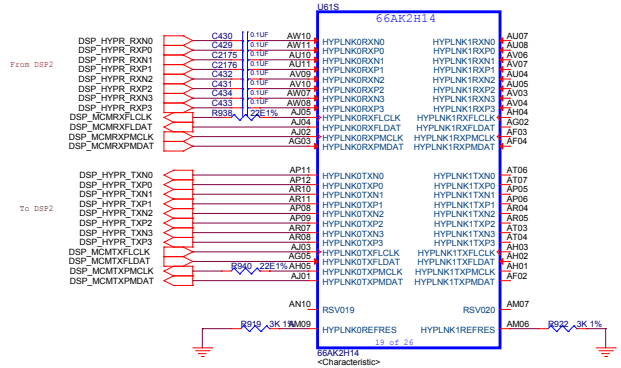

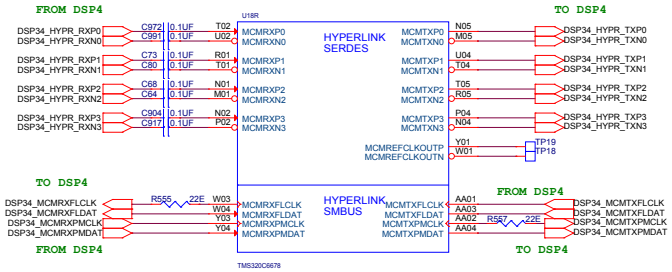

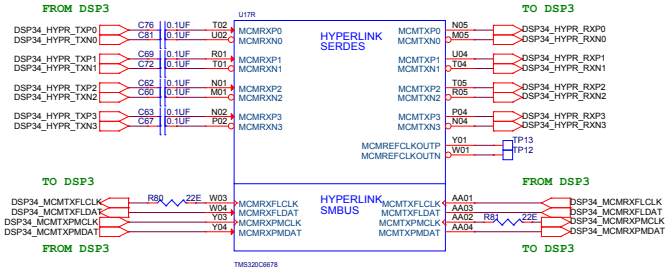

CORNET TECHNOLOGY	CORNET TECHNOLOGY (INDIA) PRIVATE LIMITED. CHENNAI - CONFIDENTIAL		
Title :	VPX MULTICORE DSP BOARD		
Size A2	Project Number : C15023		Rev A
Date: Friday, May 08, 2015	Sheet 5 of 39		