DSP Core Voltage Generation section

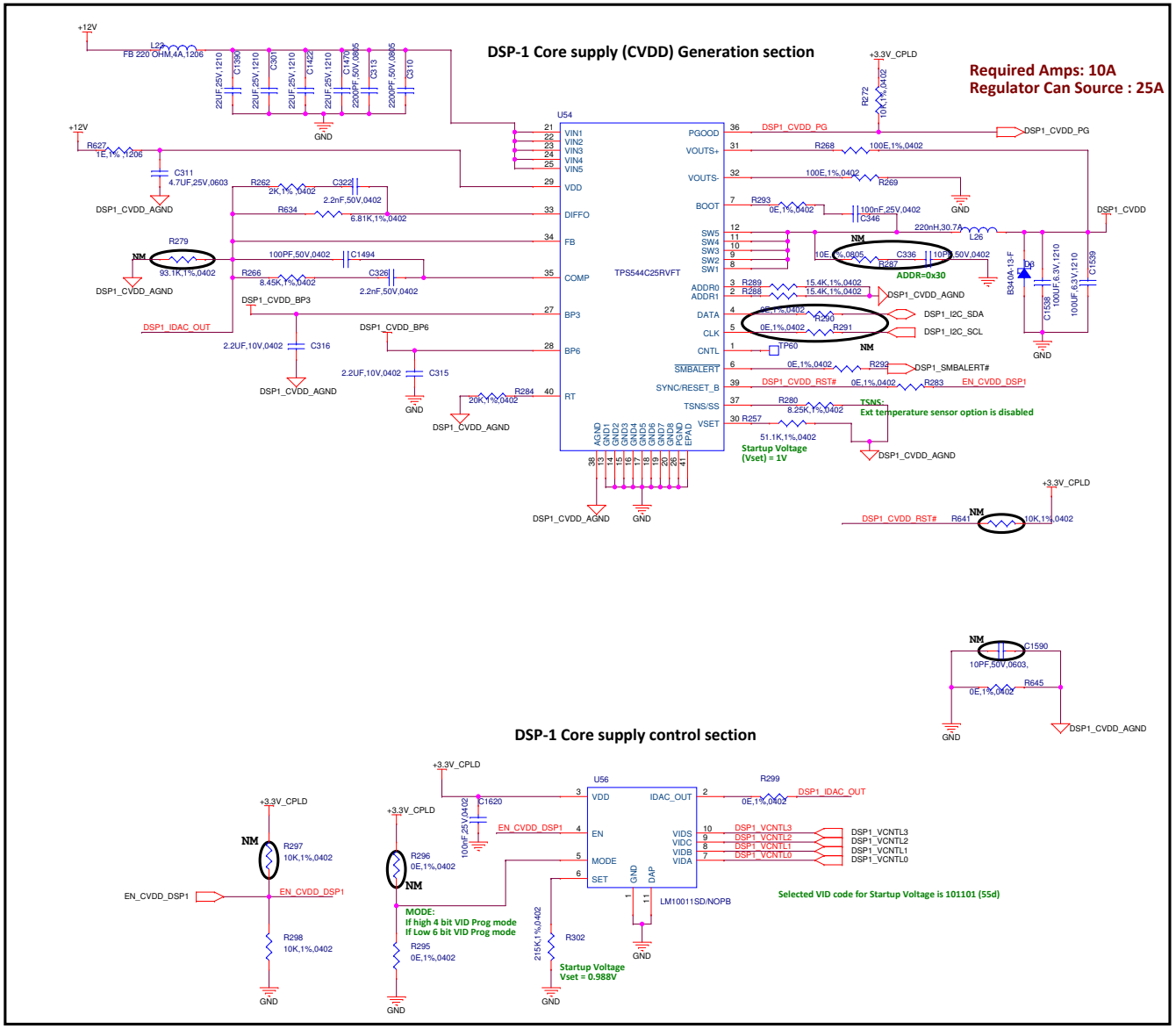

Title	<Title>	
Size C	Document Number <Doc>	Rev <RevCode>
Date: Monday, September 07, 2020	Sheet 1 of 1	