DDR3 INTERFACE

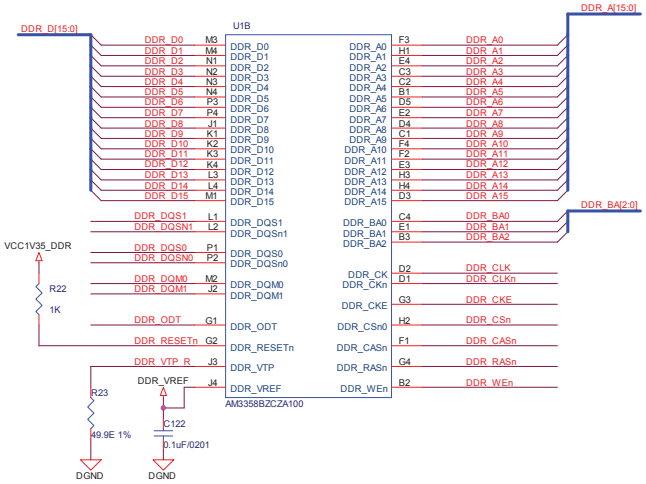

4Gb (512Mx8) DDR3-1

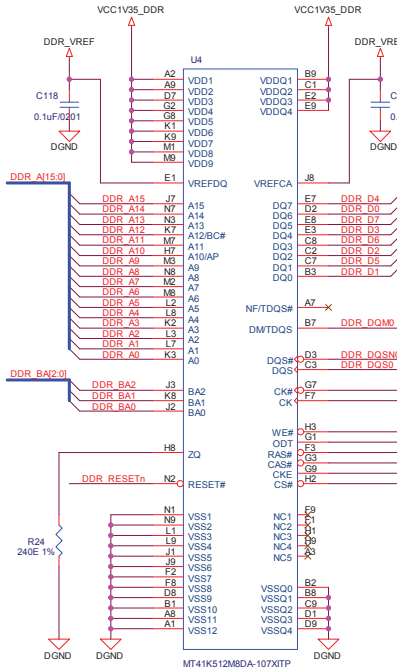

4Gb (512Mx8) DDR3-2

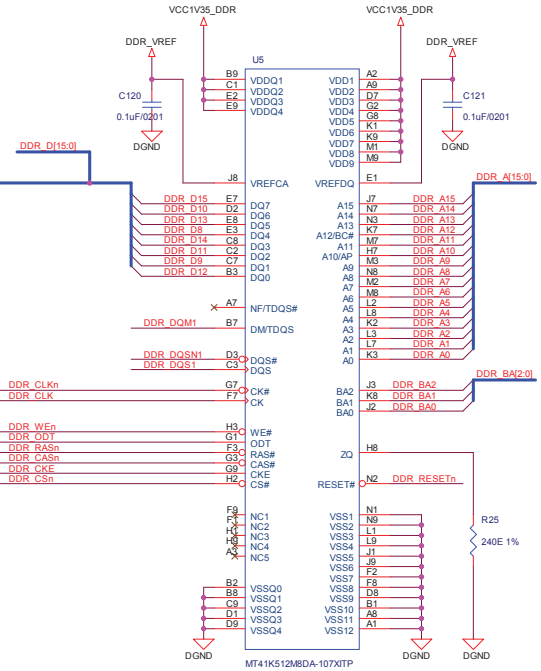

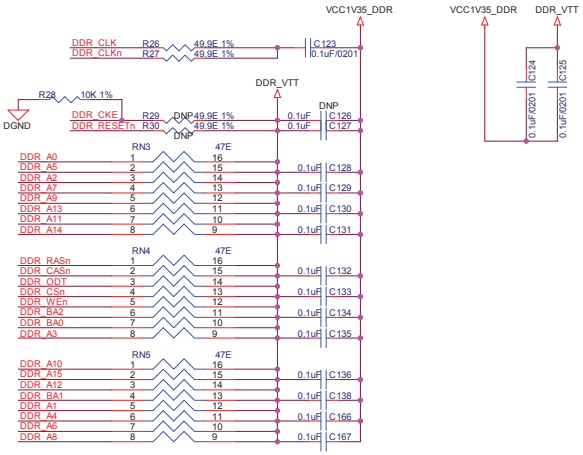

DDR3-1 MEMORY DECOUPLING CAPACITORS
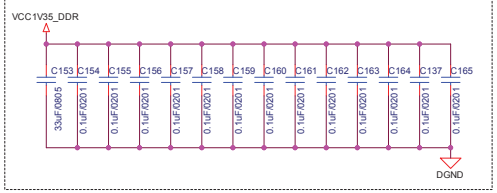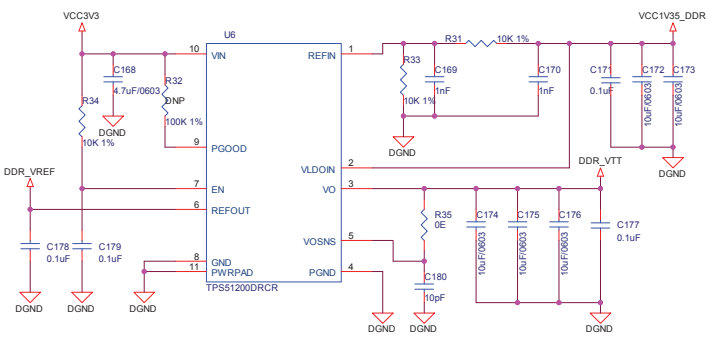
DDR3-2 MEMORY DECOUPLING CAPACITORS