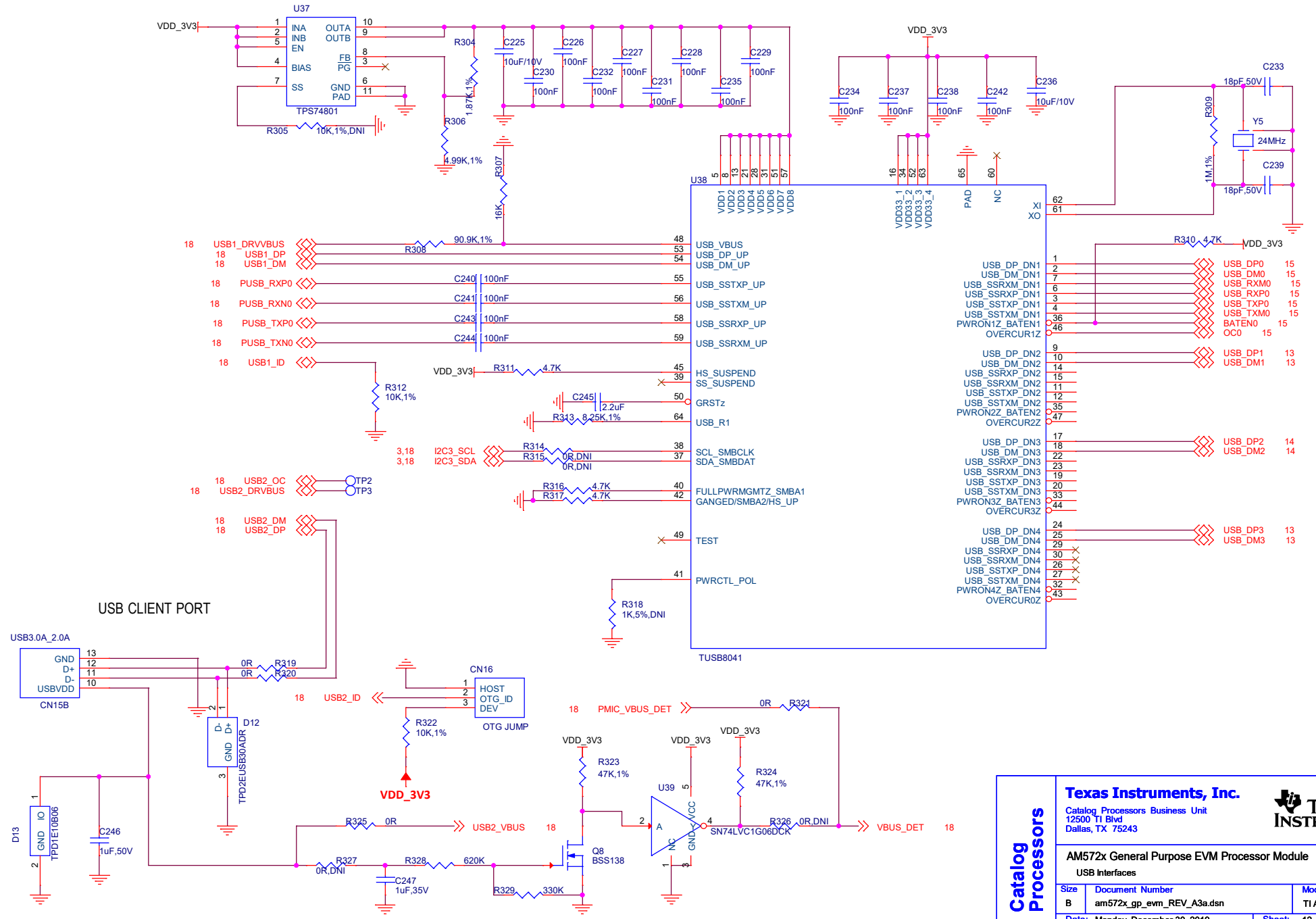

Catalog Processors

Texas Instruments, Inc.
Catalog Processors Business Unit
12500 TI Blvd
Dallas, TX 75243

TEXAS INSTRUMENTS

AM572x General Purpose EVM Processor Module
USB Interfaces

Size	Document Number	Modified By:	Rev
B	am572x_gp_evm_REV_A3a.dsn	TI Applications	A3a

Date: Monday, December 30, 2019 Sheet: 12 of 18