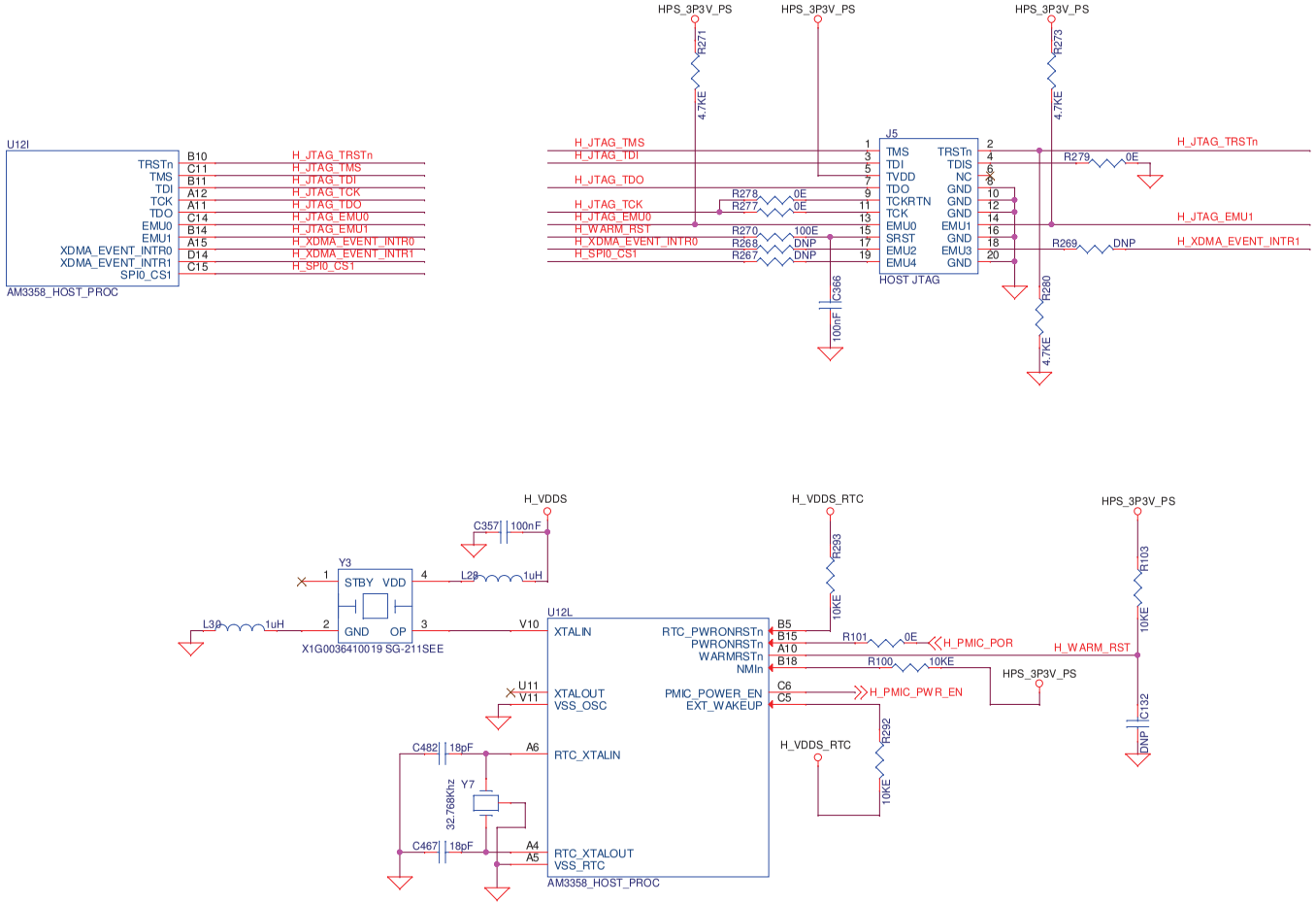

Title	HOST PROCESSOR JTAG DEBUG CONNECTOR		
Size A3	Document Number 1		Rev 1
Date: Wednesday, July 20, 2016	Sheet 9 of 26		