4.5.1 Power Sequencing

Figure 4-4 shows the power up sequence of the all Power supplies present on the processor card. Note processor specific power supplies are provided from the Dual PMICs, and its specific power sequence is to support the processor sequence requirements. This sequence is documented in the device-specific processor's data manual. Figure 4-4 illustrates the support of all the other system supplies.

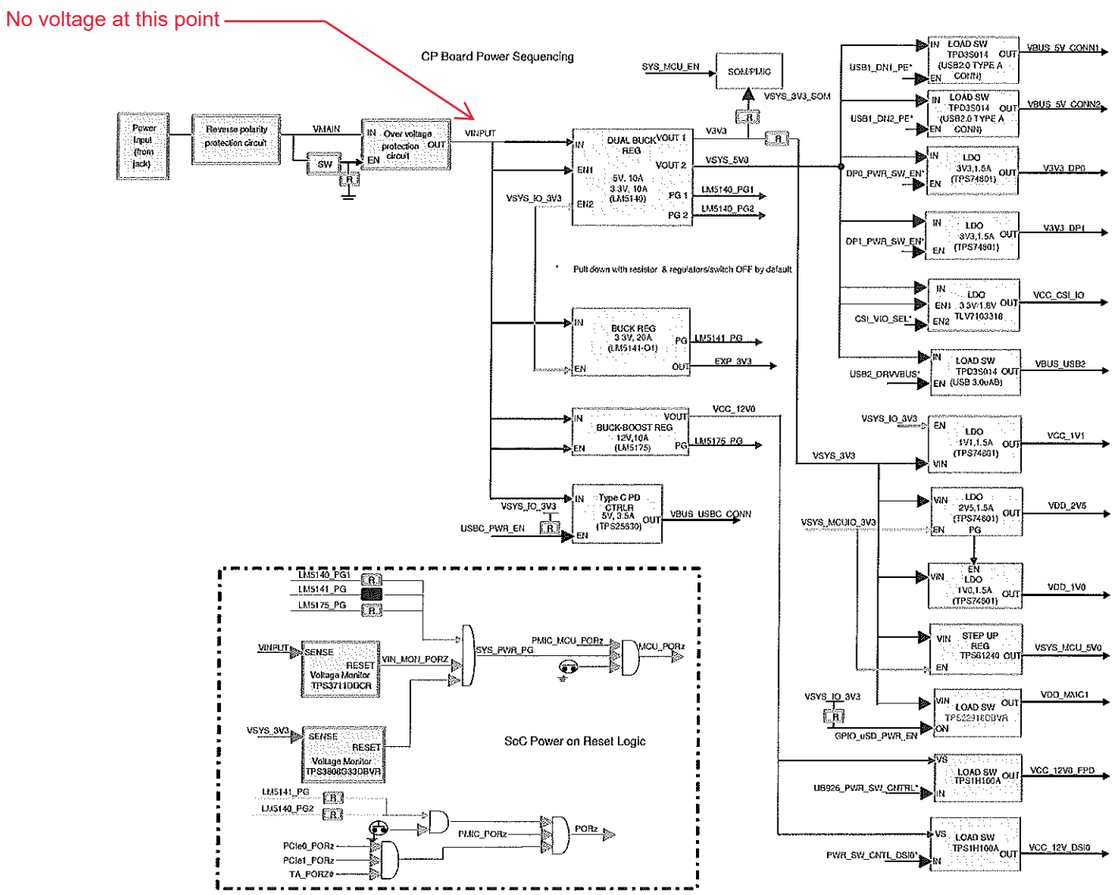

Figure 4-4. Power ON Sequencing

Copyright © 2024 Texas Instruments Incorporated