MMC1 - SD CARD

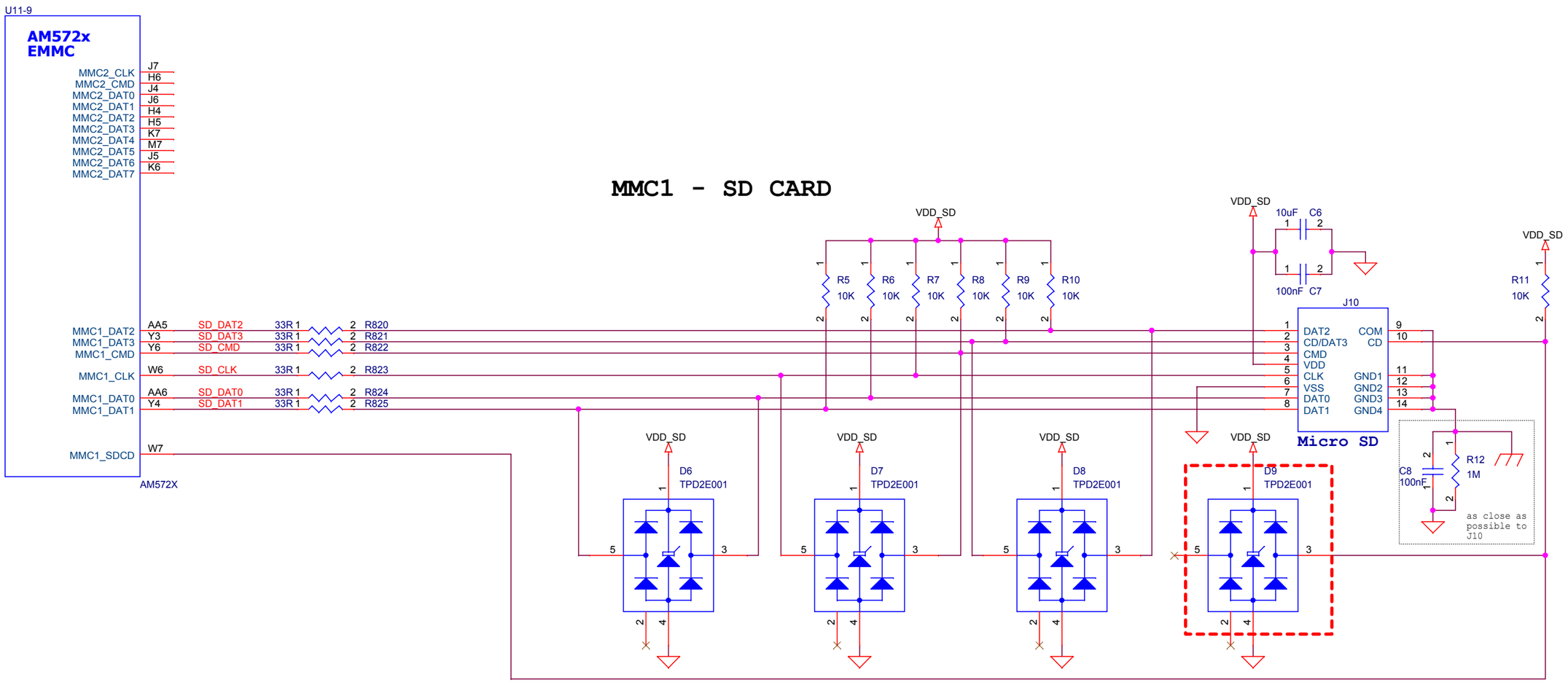

* - Component not mounted

PCB P/N: PCD-DELM075A-R1		
Title: EMMC		
Size: A3	Document Number: ED-CONPLION01	Rev: F
Date: Tuesday, February 28, 2017	Sheet 5 of 23	