CPU PCIe IO

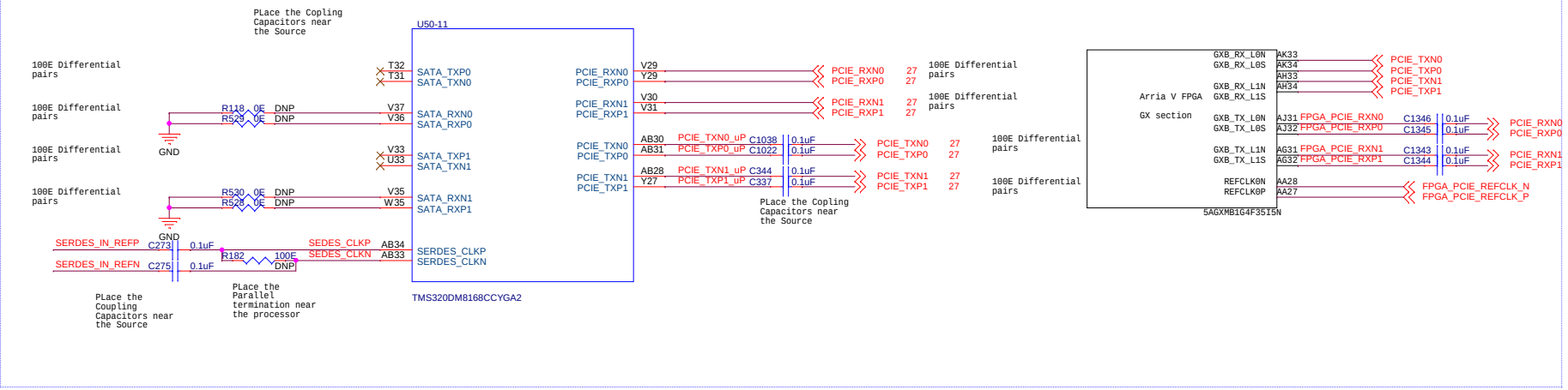
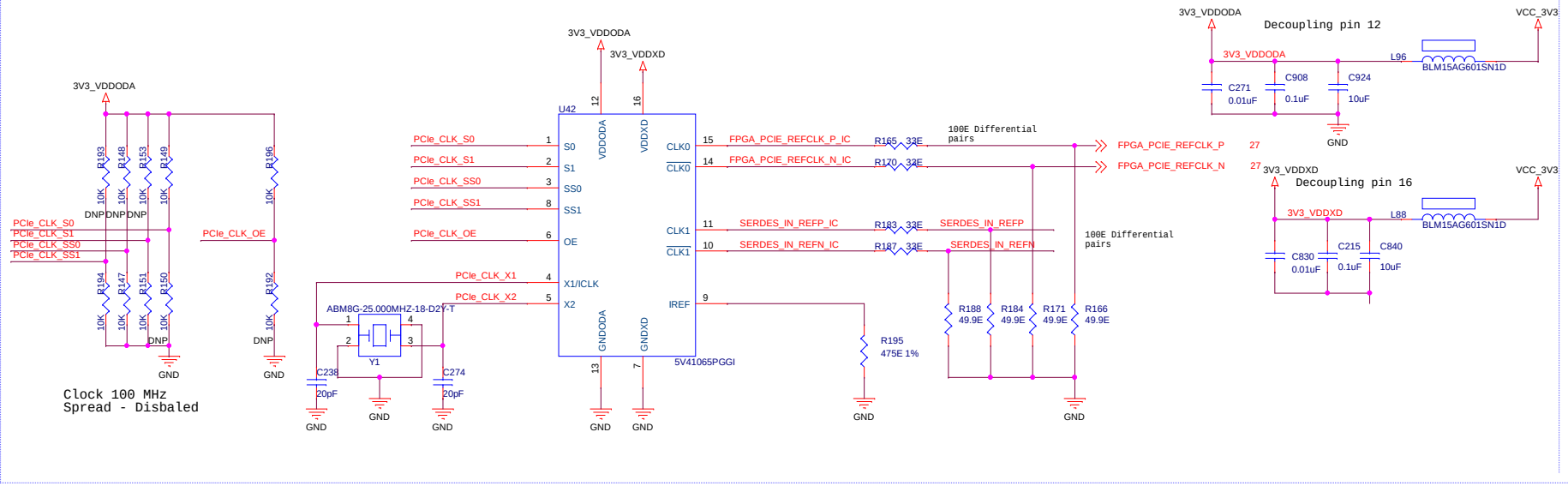
CLOCK GENERATOR