Ethernet, RJ45, PHY Connections

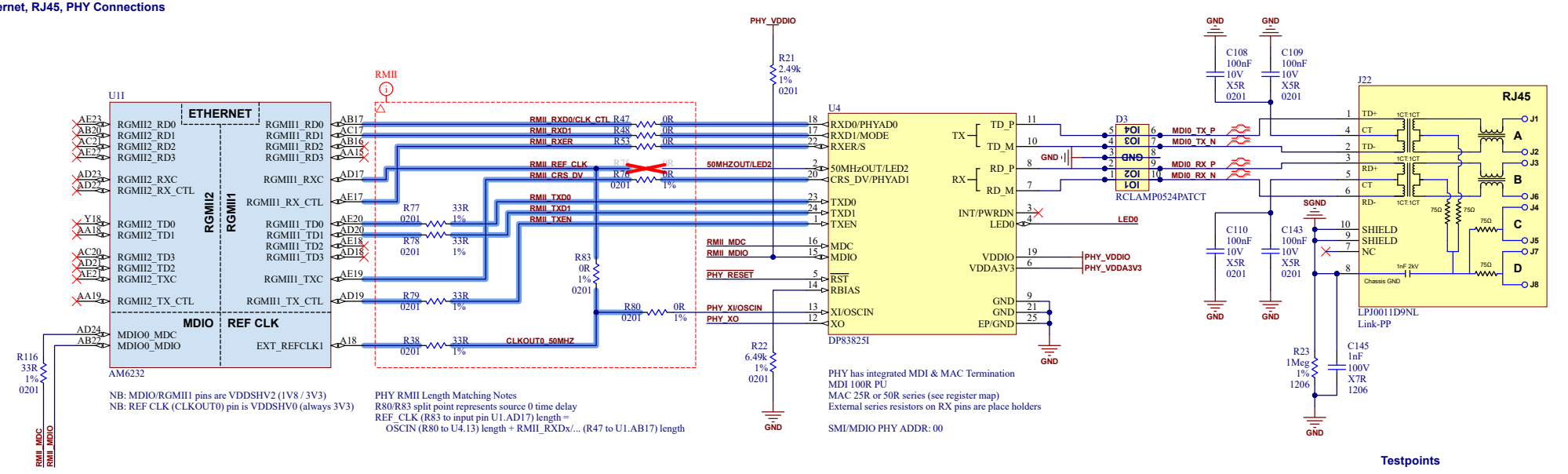

Testpoints

PHY_VDDIO	TP5	PDVDD
PHY_VDDA3V3	TP6	PAVDD
PHY_XI/OSCIN	TP7	XI

Strapping / Debug LEDs

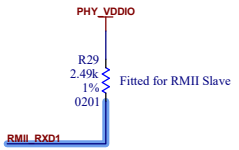

PHY Address: RX_D0/CRS_DV
Internal pull-down sets default as 00

RMII MAC Mode: RX_D1
Internal pull-down sets default as 0
0: RMII Master Mode
1: RMII Slave Mode

RMII MAC Mode: 50MHzOut/LED2
Internal pull-down sets default as 0
0: Pin 20 configured as CRS_DV
1: Pin 20 configured as RX_DV (RMII Repeater Mode)

Auto Negotiation: RX_ER
Internal pull-down sets default as 0
0: Auto MDIX Enabled
1: Auto MDIX Disabled

Auto Negotiation: LED0
Internal pull-down sets default as 0
0: Auto Negotiation Enabled
1: Auto Negotiation Disabled. Force Mode 100M enabled

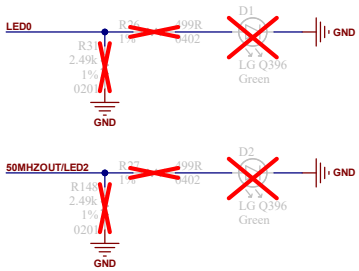

LED0/2 default function
LED0: Activity & Link Status
LED2: RX/TX Activity
See: IO_CFG_Register
See: LEDCFG_Register

Although LED_1 exists in register map
no pin is available on DP83825i

NB: typo in Table 86 DP83825i Datasheet
LED_2 Control:Selects the source for LED_2

PHY Crystal

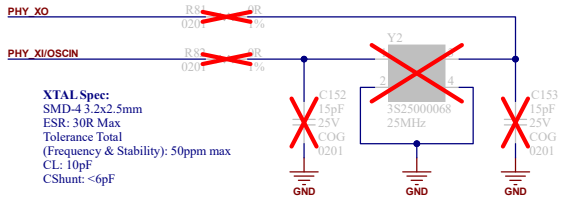

XTAL Spec:
SMD-4 3.2x2.5mm
ESR: 30R Max
Tolerance Total
(Frequency & Stability): 50ppm max
CL: 10pF
CShunt: <6pF

PHY Reset

AND gate must support level translation for 1V8 VDDIO application
As XI clock is not guaranteed during power ramp,
an additional reset pulse may be required from Sitara after power-up

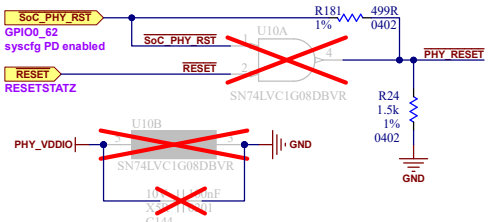

PHY Decoupling

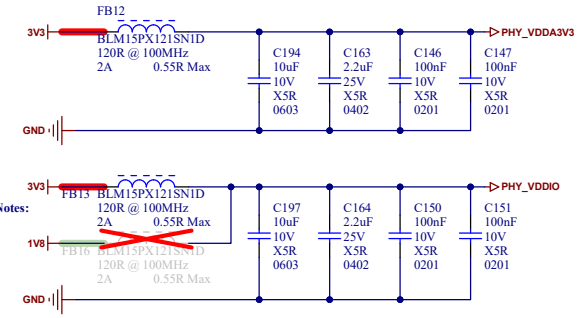

PHY Configuration Notes

Option 1: PHY Slave, AM6232 EXT_REFCLK1/CLKOUT0 source
CLKOUT0 to be configured for 50MHz, 3V3 operation, +-50ppm total required
PHY_XO should be floating in this configuration
In this configuration VDDIO must be 3V3, as CLKOUT0 is always 3V3
PHY configured as RMII slave and CLKOUT0 routed back to MAC REF_CLK input

Option 2: 25MHz XTAL
PHY may be configured as RMII master or slave
-> See strapping config
In this configuration VDDIO may be 3V3 or 1V8
-> PHY_VDDIO setting must follow VDDSHV2 setting