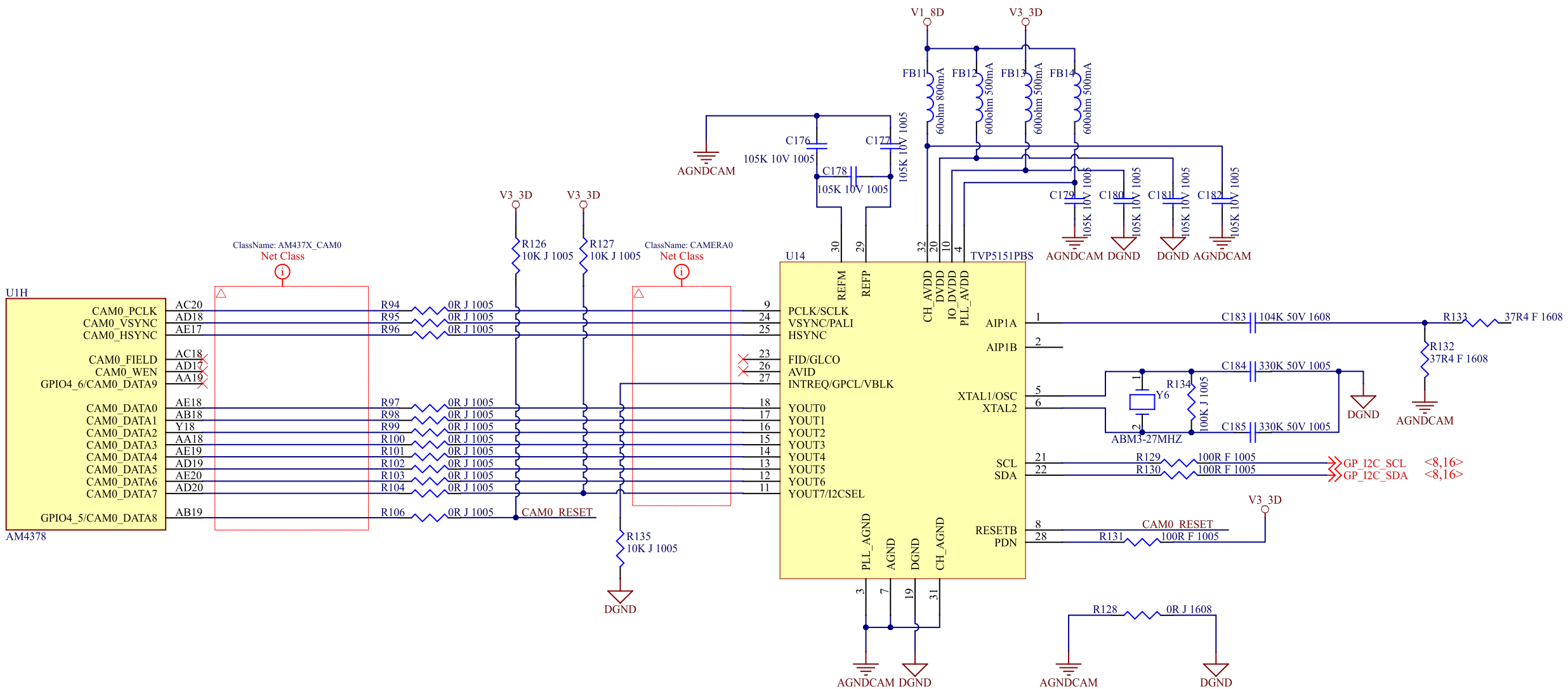
V1_8D
V3_3D
FB11
FB12
FB13
FB14
60ohm 800mA
600ohm 500mA
600ohm 500mA
600ohm 500mA
600ohm 500mA
C176
105K 10V 1005
C177
105K 10V 1005
C178
105K 10V 1005
AGNDCAM
C179
C180
C181
C182
105K 10V 1005
AGNDCAM DGND
DGND AGNDCAM
ClassName: AM437X_CAM0
Net Class
ClassName: CAMERA0
Net Class
R126
10K J 1005
R127
10K J 1005
U1H
AM4378
CAM0_PCLK
CAM0_VSYNC
CAM0_HSYNC
CAM0_FIELD
CAM0_WEN
GPIO4_6/CAM0_DATA9
CAM0_DATA0
CAM0_DATA1
CAM0_DATA2
CAM0_DATA3
CAM0_DATA4
CAM0_DATA5
CAM0_DATA6
CAM0_DATA7
GPIO4_5/CAM0_DATA8
AC20
AD18
AE17
AC18
AD17
AA19
AE18
AB18
Y18
AA18
AE19
AD19
AE20
AD20
AB19
R94
R95
R96
R97
R98
R99
R100
R101
R102
R103
R104
R106
0R J 1005
CAM0_RESET
R135
10K J 1005
DGND
U14
TVP5151PBS
REFM
REFP
CH_AVDD
DVDD
IO_DVDD
PLL_AVDD
PCLK/SCLK
VSYNC/PALI
HSYNC
FID/GLCO
AVID
INTREQ/GPCL/VBLK
YOUT0
YOUT1
YOUT2
YOUT3
YOUT4
YOUT5
YOUT6
YOUT7/I2CSEL
AIP1A
AIP1B
XTAL1/OSC
XTAL2
SCL
SDA
RESETB
PDN
PLL_AGND
AGND
DGND
CH_AGND
AGNDCAM DGND
C183
104K 50V 1608
R133
37R4 F 1608
R132
37R4 F 1608
C184
330K 50V 1005
C185
330K 50V 1005
R134
100K J 1005
Y6
ABM3-27MHZ
DGND
AGNDCAM
R129
R130
100R F 1005
GP_I2C_SCL
GP_I2C_SDA
<8,16>
<8,16>
V3_3D
CAM0_RESET
R131
100R F 1005
R128
0R J 1608
AGNDCAM
DGND