ProMOS TECHNOLOGIES

V73CBG04808RD

PRELIMINARY

HIGH PERFORMANCE 4Gbit DDR3L SDRAM
8 BANKS X 64Mbit X 8

	- G6	- H7	- I9	- J11	- K13
	DDR3-800	DDR3-1066	DDR3-1333	DDR3-1600	DDR3-1866
Clock Cycle Time ($t_{CK5, CWL=5}$)	3.0ns	3.0ns	3.0ns	3.0ns	3.0ns
Clock Cycle Time ($t_{CK6, CWL=5}$)	2.5ns	2.5ns	2.5 ns	2.5 ns	2.5 ns
Clock Cycle Time ($t_{CK7, CWL=6}$)	-	1.875 ns	1.875 ns	1.875 ns	1.875 ns
Clock Cycle Time ($t_{CK8, CWL=6}$)	-	1.875 ns	1.875 ns	1.875 ns	1.875 ns
Clock Cycle Time ($t_{CK9, CWL=7}$)	-	-	1.5 ns	1.5 ns	1.5 ns
Clock Cycle Time ($t_{CK10, CWL=7}$)	-	-	1.5 ns	1.5 ns	1.5 ns
Clock Cycle Time ($t_{CK11, CWL=8}$)	-	-	-	1.25 ns	1.25 ns
Clock Cycle Time ($t_{CK13, CWL=9}$)	-	-	-	-	1.07 ns
System Frequency ($f_{CK\ max}$)	400 MHz	533 MHz	667 MHz	800 MHz	933 MHz

Specifications

- Density : 4G bits
- Organization :
  - 64M words x 8 bits x 8 banks
- Package :
  - 78-ball FBGA
  - Lead-free (RoHS compliant) and Halogen-free
- Power supply : VDD, VDDQ = 1.35V (1.283V to 1.45V)
  - Backward compatible to VDD, VDDQ = 1.5V ± 0.075V
- Data rate : 800Mbps/1066Mbps/1333Mbps/1600Mbps/1866Mbps
- 1KB page size
  - Row address: A0 to A15
  - Column address: A0 to A9
- Eight internal banks for concurrent operation
- Burst lengths (BL) : 8 and 4 with Burst Chop (BC)
- Burst type (BT) :
  - Sequential (8, 4 with BC)
  - Interleave (8, 4 with BC)
- $\overline{CAS}$ Latency (CL) : 5, 6, 7, 8, 9, 10, 11, 13
- $\overline{CAS}$ Write Latency (CWL) : 5, 6, 7, 8 ,9
- Precharge : auto precharge option for each burst access
- Driver strength : RZQ/7, RZQ/6 (RZQ = 240 Ω)
- Refresh : auto-refresh, self-refresh
- Refresh cycles :
  - Average refresh period
    7.8 μs at 0°C ≤ Tc ≤ +85°C
    3.9 μs at +85°C < Tc ≤ +95°C
- Operating case temperature range
  - Comercial Tc = 0°C to +95°C
  - Industrial Tc = -40°C to +95°C
  - Automotive Tc = -40°C to +105°C

Features

- Double-data-rate architecture; two data transfers per clock cycle
- The high-speed data transfer is realized by the 8 bits prefetch pipe-lined architecture
- Bi-directional differential data strobe (DQS and $\overline{DQS}$) is transmitted/ received with data for capturing data at the receiver
- DQS is edge-aligned with data for READs; center-aligned with data for WRITEs
- Differential clock inputs (CK and $\overline{CK}$)
- DLL aligns DQ and DQS transitions with CK transitions
- Commands entered on each positive CK edge; data and data mask referenced to both edges of DQS
- Data mask (DM) for write data
- Posted $\overline{CAS}$ by programmable additive latency for better command and data bus efficiency
- On-Die Termination (ODT) for better signal quality
  - Synchronous ODT
  - Dynamic ODT
  - Asynchronous ODT
- Multi Purpose Register (MPR) for pre-defined pattern read out
- ZQ calibration for DQ drive and ODT
- Programmable Partial Array Self-Refresh (PASR)
- $\overline{RESET}$ pin for Power-up sequence and reset function
- SRT range : Normal/extended
- Programmable Output driver impedance control

Device Usage Chart

Operating Temperature Range	Package Outline	Speed					Power		Temperature Mark
	78-ball FBGA	- G6	- H7	- I9	- J11	- K13	Std.	L	
0°C ≤ Tc ≤ 95°C	•	•	•	•	•	•	•	•	Blank
-40°C ≤ Tc ≤ 95°C	•	•	•	•	•	•	•	•	I
-40°C ≤ Tc ≤ 105°C	•	•	•	•	•	•	•	•	H

Part Number Information

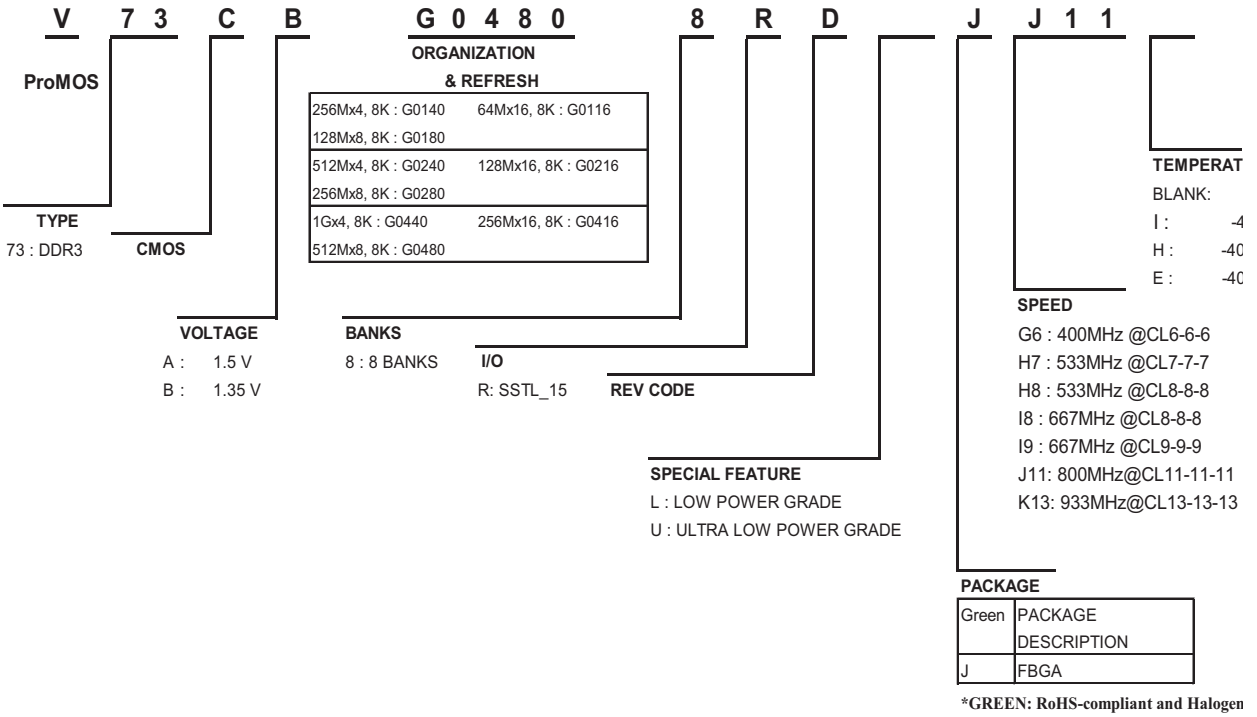

4Gb DDR3 SDRAM Addressing

Configuration	**512Mb x 8**
# of Bank	8
Bank Address	BA0 ~ BA2
Auto precharge	A10/AP
Row Address	A0 ~ A15
Column Address	A0 ~ A9
BC switch on the fly	A12/$\overline{BC}$
Page size	1 KB

Pin Configurations

78-ball FBGA (x8 configuration)

	1	2	3	4	5	6	7	8	9	
A	V_{SS}	V_{DD}	NC				NU/$\overline{TDQS}$	V_{SS}	V_{DD}	**A**
B	V_{SS}	V_{SSQ}	DQ0				DM/TDQS	V_{SSQ}	V_{DDQ}	**B**
C	V_{DDQ}	DQ2	DQS				DQ1	DQ3	V_{SSQ}	**C**
D	V_{SSQ}	DQ6	$\overline{DQS}$				V_{DD}	V_{SS}	V_{SSQ}	**D**
E	V_{REFDQ}	V_{DDQ}	DQ4				DQ7	DQ5	V_{DDQ}	**E**
F	NC	V_{SS}	$\overline{RAS}$				CK	V_{SS}	NC	**F**
G	ODT	V_{DD}	$\overline{CAS}$				$\overline{CK}$	V_{DD}	CKE	**G**
H	NC	$\overline{CS}$	$\overline{WE}$				A10/AP	ZQ	NC	**H**
J	V_{SS}	BA0	BA2				A15	V_{REFCA}	V_{SS}	**J**
K	V_{DD}	A3	A0				A12/$\overline{BC}$	BA1	V_{DD}	**K**
L	V_{SS}	A5	A2				A1	A4	V_{SS}	**L**
M	V_{DD}	A7	A9				A11	A6	V_{DD}	**M**
N	V_{SS}	$\overline{RESET}$	A13				A14	A8	V_{SS}	**N**

Ball Locations (x8)

● Populated ball

\+ Ball not populated

Top view

(See the balls through the package)

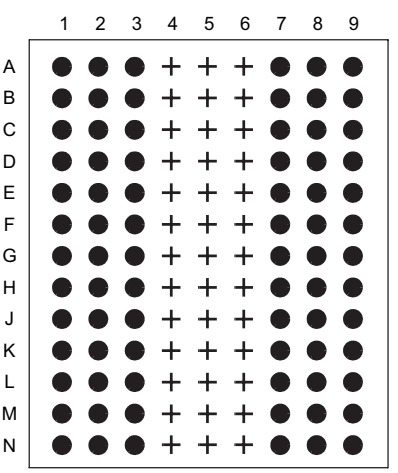

Signal Pin Description

Pin	Type	Function
CK, $\overline{CK}$	Input	**Clock :** CK and $\overline{CK}$ are differential clock inputs. All address and control input signals are sampled on the crossing of the positive edge of CK and negative edge of $\overline{CK}$. Output (read) data is referenced to the crossings of CK and $\overline{CK}$
CKE	Input	**Clock Enable :** CKE HIGH activates, and CKE Low deactivates, internal clock signals and device input buffers and output drivers. Taking CKE Low provides Precharge Power-Down and Self Refresh operation (all banks idle), or Active Power-Down (Row Active in any bank). CKE is asynchronous for self refresh exit. After V_{REFCA} has become stable during the power on and initialization sequence, it must be maintained during all operations (including Self-Refresh). CKE must be maintained high throughout read and write accesses. Input buffers, excluding CK, $\overline{CK}$, ODT and CKE are disabled during power-down. Input buffers, excluding CKE, are disabled during Self -Refresh.
$\overline{CS}$	Input	**Chip Select :** All commands are masked when $\overline{CS}$ is registered HIGH. $\overline{CS}$ provides for external Rank selection on systems with multiple Ranks. $\overline{CS}$ is considered part of the command code.
ODT	Input	**On Die Termination :** ODT (registered HIGH) enables termination resistance internal to the DDR3 SDRAM. When enabled, ODT is only applied to each DQ, DQS, $\overline{DQS}$ and DM/TDQS, NU/$\overline{TDQS}$ (When TDQS is enabled via Mode Register A11=1 in MR1) signal for x8 configurations. The ODT pin will be ignored if the Mode Register (MR1) is programmed to disable ODT.
$\overline{RAS}$, $\overline{CAS}$, $\overline{WE}$	Input	**Command Inputs :** $\overline{RAS}$, $\overline{CAS}$ and $\overline{WE}$ (along with $\overline{CS}$) define the command being entered.
DM (DMU), (DML)	Input	**Input Data Mask :** DM is an input mask signal for write data. Input data is masked when DM is sampled HIGH coincident with that input data during a Write access. DM is sampled on both edges of DQS. For x8 device, the function of DM or TDQS/$\overline{TDQS}$ is enabled by Mode Register A11 setting in MR1.
BA0 - BA2	Input	**Bank Address Inputs :** BA0 - BA2 define to which bank an Active, Read, Write or Precharge command is being applied. Bank address also determines which mode register is to be accessed during a MRS cycle.
A0 - A15	Input	**Address Inputs :** Provided the row address for Active commands and the column address for Read / Write commands to select one location out of the memory array in the respective bank. (A10/AP and A12/$\overline{BC}$ have additional functions, see below) The address inputs also provide the op-code during Mode Register Set commands.
A10 / AP	Input	**Autoprecharge :** A10 is sampled during Read/Write commands to determine whether Autoprecharge should be per-formed to the accessed bank after the Read/Write operation. (HIGH:Autoprecharge; LOW: No Autoprecharge)A10 is sampled during a Precharge command to determine whether the Precharge applies to one bank (A10 LOW) or all banks (A10 HIGH). if only one bank is to be precharged, the bank is selected by bank addresses.
A12 / $\overline{BC}$	Input	**Burst Chop :** A12 is sampled during Read and Write commands to determine if burst chop(on-the-fly) will be per-formed. (HIGH : no burst chop, LOW : burst chopped). See command truth table for details.
$\overline{RESET}$	Input	**Active Low Asynchronous Reset :** Reset is active when $\overline{RESET}$ is LOW, and inactive when $\overline{RESET}$ is HIGH. $\overline{RESET}$ must be HIGH during normal operation. $\overline{RESET}$ is a CMOS rail to rail signal with DC high and low at 80% and 20% of VDD, i.e. 1.20V for DC high and 0.30V for DC low.
DQ	Input/ Output	**Data Input/ Output :** Bi-directional data bus.
DQS, $\overline{DQS}$	Input/ Output	**Data Strobe :** Output with read data, input with write data. Edge-aligned with read data, centered in write data. The data strobe DQS is paired with differential signals $\overline{DQS}$, respectively, to provide differential pair signaling to the system during reads and writes. DDR3 SDRAM supports differential data strobe only and does not support single-ended.

Pin	Type	Function
TDQS, $\overline{TDQS}$	Output	**Termination Data Strobe :** TDQS/$\overline{TDQS}$ is applicable for x8 DRAMs only. When enabled via Mode Register A11=1 in MR1, DRAM will enable the same termination resistance function on TDQS/$\overline{TDQS}$ that is applied to DQS/$\overline{DQS}$. When disabled via mode register A11=0 in MR1, DM/TDQS will provide the data mask function and $\overline{TDQS}$ is not used.
NC		No Connect: No internal electrical connection is present.
VDDQ	Supply	DQ power supply: 1.35V, 1.283 - 1.45V operational; compatible to 1.5+/- 0.075V operation.
VSSQ	Supply	DQ Ground
VDD	Supply	Power Supply: 1.35V, 1.283 - 1.45V operational; compatible to 1.5+/- 0.075V operation.
VSS	Supply	Ground
VREFDQ	Supply	Reference Voltage for DQ
VREFCA	Supply	Reference Voltage for CA
ZQ	Supply	Reference Pin for ZQ calibration
NOTE : Input only pins (BA0-BA2, A0-A15, $\overline{RAS}$, $\overline{CAS}$, $\overline{WE}$, $\overline{CS}$, CKE, ODT and $\overline{RESET}$) do not supply termination.		

Simplified State Diagram

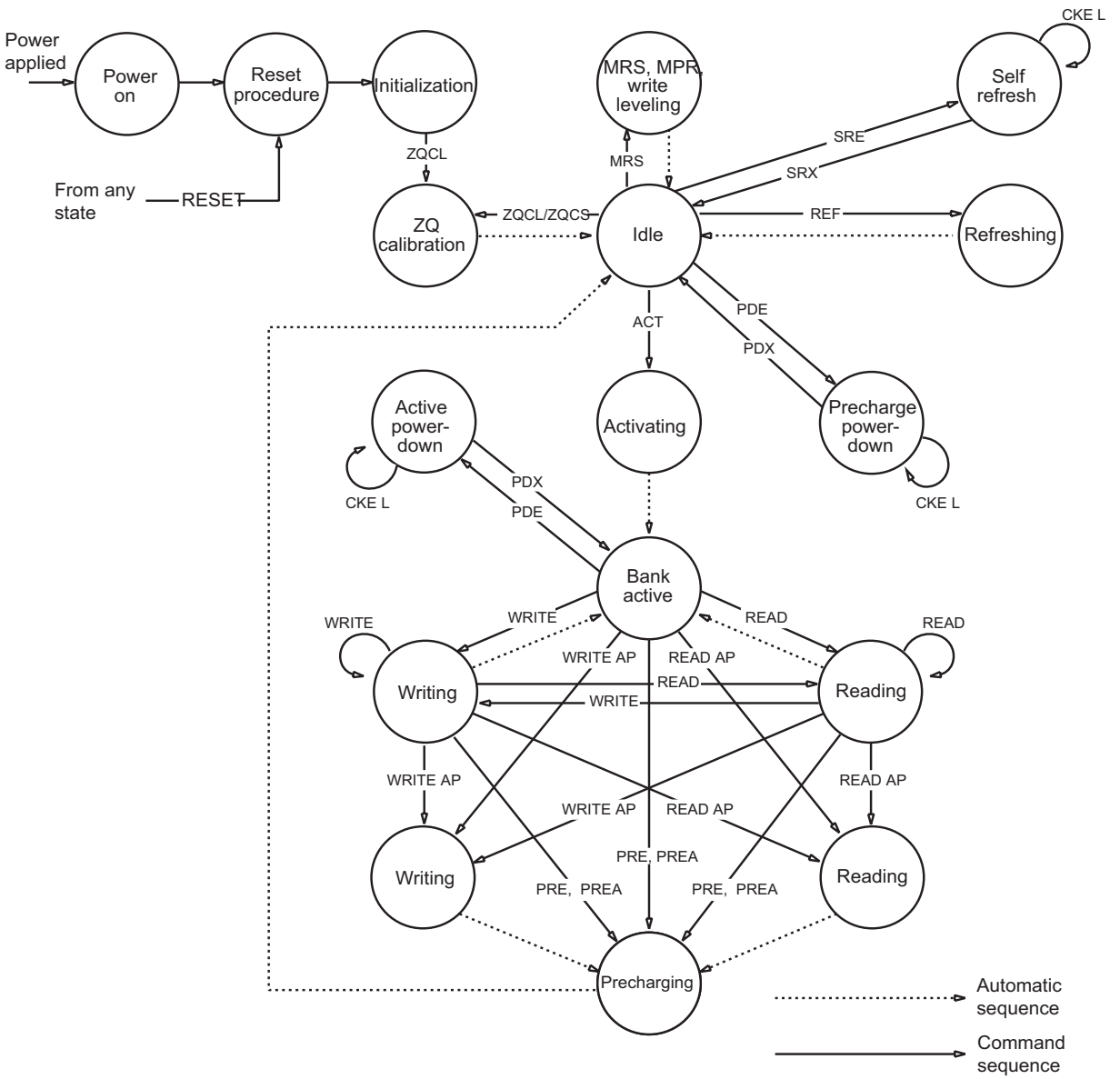

ACT = ACTIVATE
MPR = Multipurpose register
MRS = Mode register set
PDE = Power-down entry
PDX = Power-down exit
PRE = PRECHARGE

PREA = PRECHARGE ALL
READ = RD, RDS4, RDS8
READ AP = RDAP, RDAPS4, RDAPS8
REF = REFRESH
RESET = START RESET PROCEDURE
SRE = Self refresh entry

SRX = Self refresh exit
WRITE = WR, WRS4, WRS8
WRITE AP = WRAP, WRAPS4, WRAPS8
ZQCL = ZQ LONG CALIBRATION
ZQCS = ZQ SHORT CALIBRATION

Basic Functionality

Read and write operation to the DDR3 SDRAM are burst oriented, start at a selected location, and continue for a burst length of four or eight in a programmed sequence. Operation begins with the registration of an Active command, which is then followed by a Read or Write command. The address bits registered coincident with the Active command are used to select the bank and row to be accessed (BA0-BA2 select the bank; A0-A15 select the row).The address bits registered coincident with the Read or Write command are used to select the starting column location for the burst operation, determine if the auto precharge command is to be issued (via A10/AP), and the select BC4 or BL8 mode “on the fly” (via A12) if enabled in the mode register.

Prior to normal operation, the DDR3 SDRAM must be powered up and initialized in a predefined manner. The following sections provide detailed information covering device reset and initialization, register definition, command descriptions and device operation.

Power-up and Initialization Sequence

The following sequence is required for POWER UP and Initialization.

1. Apply power and attempt to maintain $\overline{\text{RESET}}$ below 0.2 x VDD (all other inputs may be undefined). $\overline{\text{RESET}}$ needs to be maintained for minimum 200µs with stable power. CKE is pulled “Low” anytime before $\overline{\text{RESET}}$ being de-asserted (min. time 10ns). The power voltage ramp time between 300mV to VDD min must be no longer than 200ms; and during the ramp, VDD > VDDQ and VDD -VDDQ < 0.3 volts.
   - VDD and VDDQ are driven from a single power converter output, AND
   - The voltage levels on all pins other than VDD,VDDQ,VSS,VSSQ must be less than or equal to VDDQ and VDD on one side and must be larger than or equal to VSSQ and VSS on the other side. In addition, VTT is limited to 0.95V max once power ramp is finished, AND
   - Vref tracks VDDQ/2.

   or
   - Apply VDD without any slope reversal before or at the same time as VDDQ.
   - Apply VDDQ without any slope reversal before or at the same time as VTT & Vref.
   - The voltage levels on all pins other than VDD,VDDQ,VSS,VSSQ must be less than or equal to VDDQ and VDD on one side and must be larger than or equal to VSSQ and VSS on the other side.
2. After $\overline{\text{RESET}}$ is de-asserted, wait for another 500us until CKE becomes active. During this time, the DRAM will start internal initialization; this will bedone independently of external clocks.
3. Clocks (CK, $\overline{\text{CK}}$) need to be started and stabilized for at least 10ns or 5tCK (which is larger) before CKE goes active. Since CKE is a synchronous signal, the corresponding setup time to clock (tIS) must be met. Also a NOP or Deselect command must be registered (with tIS set up time to clock) before CKE goes active. Once the CKE registered “High” after Reset, CKE needs to be continuously registered “High” until the initialization sequenceis finished, including expiration of tDLLK and tZQinit.
4. The DDR3 SDRAM keeps its on-die termination in high-impedance state as long as $\overline{\text{RESET}}$ is asserted. Further, the SDRAM keeps its on-die termination in high impedance state after $\overline{\text{RESET}}$ deassertion until CKE is registered HIGH. The ODT input signal may be in undefined state until tIS before CKE is registered HIGH. When CKE is registered HIGH, the ODT input signal may be statically held at either LOW or HIGH. If RTT_NOM is to be enabled in MR1 and the on-die termination is required to remain in the high impedance state, the ODT input signal must be statically held LOW. In all cases, the ODT input signal remains static until the power up initialization sequence is finished, including the expiration of tDLLK and tZQinit.
5. After CKE is registered high, wait minimum of Reset CKE Exit time, tXPR, before issuing the first MRS command to load mode register.(tXPR=Max(tXS, 5tCK)]
6. Issue MRS Command to load MR2 with all application settings. (To issue MRS command for MR2, provide “Low” to BA0 and BA2, “High” to BA1.)
7. Issue MRS Command to load MR3 with all application settings. (To issue MRS command for MR3, provide “Low” to BA2, “High” to BA0 and BA1.)
8. Issue MRS Command to load MR1 with all application settings and DLL enabled. (To issue ”DLL Enable” command, provide “Low” to A0, ”High” to BA0 and “Low” to BA1-BA2)
9. Issue MRS Command to load MR0 with all application settings and “DLL reset”. (To issue DLL reset command, provide “High” to A8 and “Low” to BA0-2).
10. Issue ZQCL command to starting ZQ calibration.
11. Wait for both tDLLK and tZQ init completed.
12. The DDR3 SDRAM is now ready for normal operation.

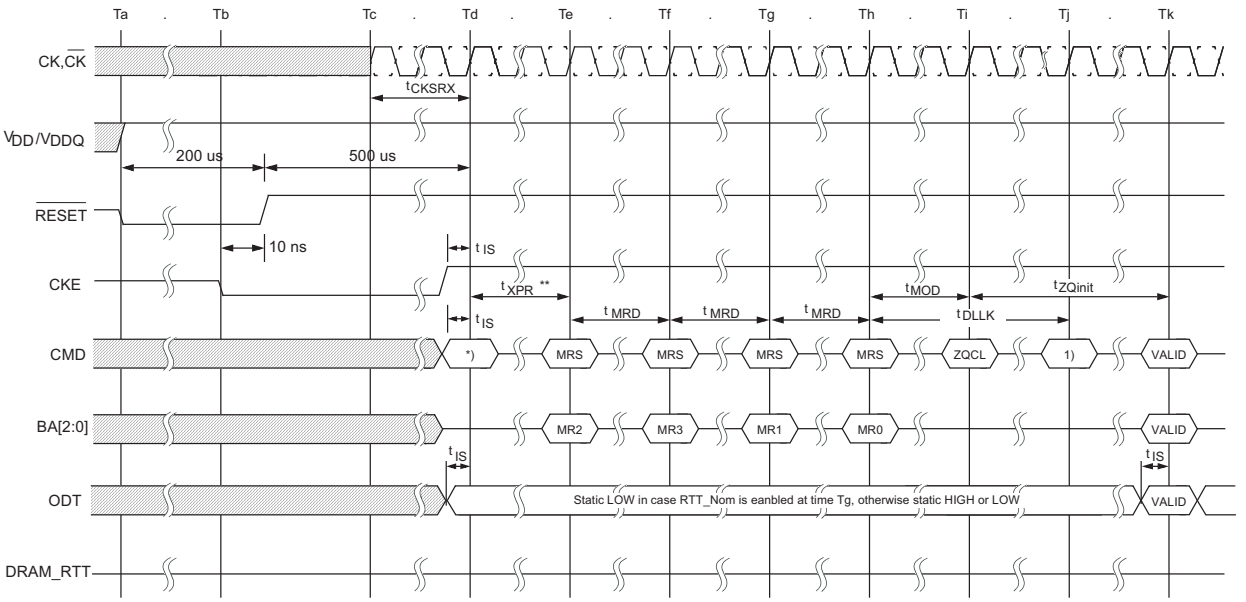

1) From time point ‘Td’ until ‘Tk’, NOP or DES commands must be applied between MRS and ZQCL commands

Reset and Initialization with Stable Power

The following sequence is required for /RESET at no power interruption initialization.

1. Assert /RESET below 0.2 x VDD anytime when reset is needed (all other inputs may be undefined). /RESET needs to be maintained for minimum 100ns. CKE is pulled low before /RESET being de-asserted (minimum time 10ns).
2. Follow Power-Up Initialization Sequence steps 2 to 11.
3. The reset sequence is now completed; DDR3 SDRAM is ready for normal operation.

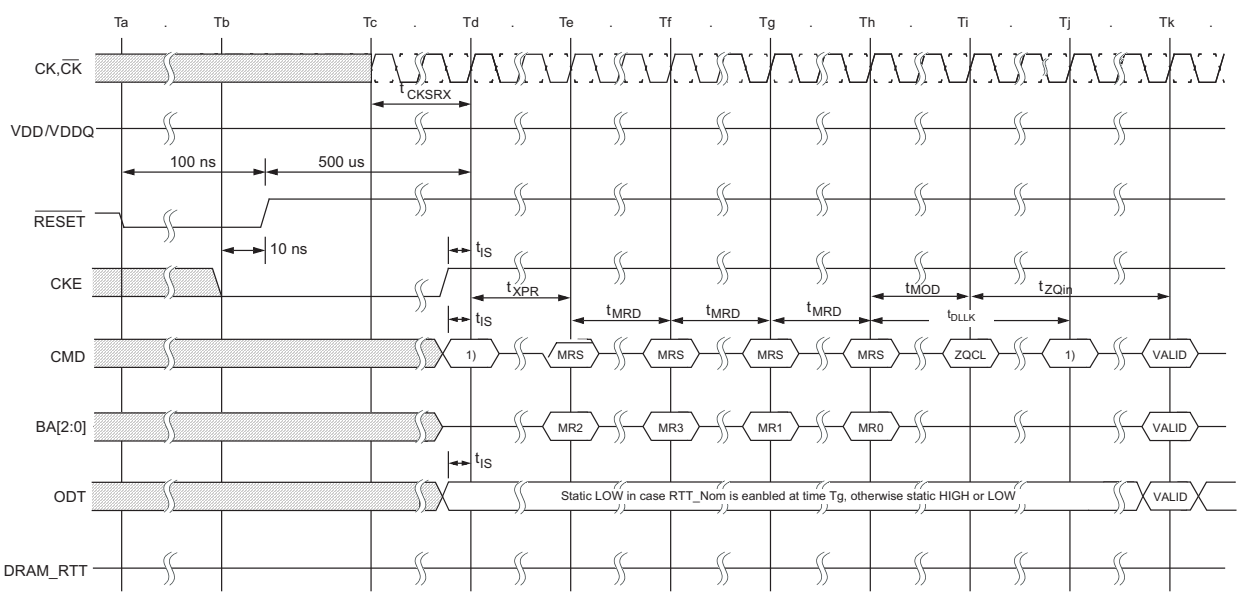

1) From time point ‘Td’ until ‘Tk’, NOP or DES commands must be applied between MRS and ZQCL commands

Mode Register MR0

The Mode Register MR0 stores the data for controlling various operating modes of DDR3 SDRAM. It controls burst length, read burst type, $\overline{CAS}$ latency, test mode, DLL reset, WR and DLL control for precharge power-down, which include various vendor specific options to make DDR3 SDRAM useful for various applications. The mode register is written by asserting low on $\overline{CS}$, $\overline{RAS}$, $\overline{CAS}$, $\overline{WE}$, BA0, BA1 and BA2, while controlling the states of address pins according to the table below.

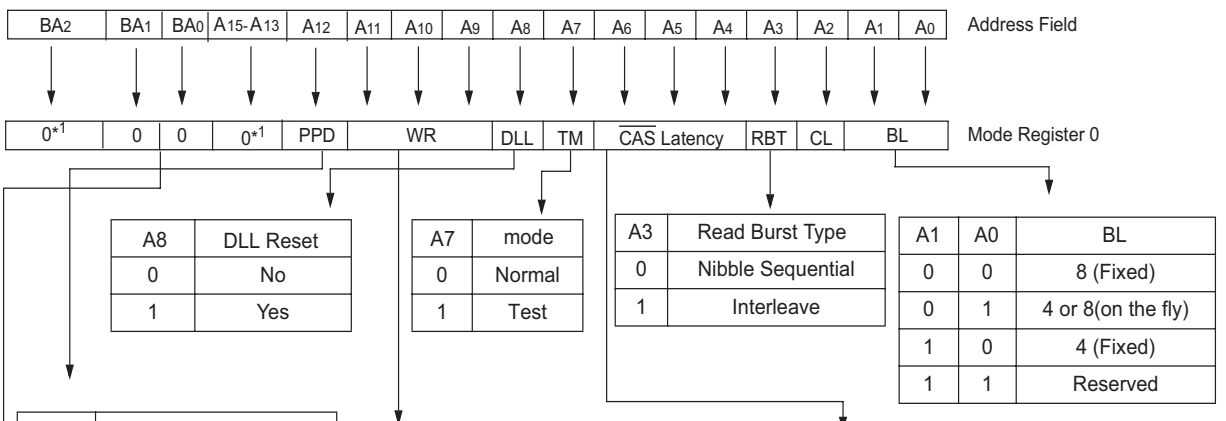

A8	DLL Reset
0	No
1	Yes

A7	mode
0	Normal
1	Test

A3	Read Burst Type
0	Nibble Sequential
1	Interleave

A1	A0	BL
0	0	8 (Fixed)
0	1	4 or 8(on the fly)
1	0	4 (Fixed)
1	1	Reserved

A12	DLL Control for Precharge PD
0	Slow exit (DLL off)
1	Fast exit (DLL on)

Write recovery for autoprecharge

A11	A10	A9	WR(cycles)
0	0	0	16*2
0	0	1	5*2
0	1	0	6*2
0	1	1	7*2
1	0	0	8*2
1	0	1	10*2
1	1	0	12*2
1	1	1	14*2

$\overline{CAS}$ Latency

A6	A5	A4	A2	Latency
0	0	0	0	Reserved
0	0	1	0	5
0	1	0	0	6
0	1	1	0	7
1	0	0	0	8
1	0	1	0	9
1	1	0	0	10
1	1	1	0	11
0	0	0	1	12
0	0	1	1	13
0	1	0	1	14

BA1	BA0	MRS mode
0	0	MR0
0	1	MR1
1	0	MR2
1	1	MR3

*1 : BA2, A13, A14 and A15 are reserved for future use and must be programmed to 0 during MRS.

*2 : WR(write recovery for autoprecharge)min in clock cycles is calculated by dividing tWR(in ns) by tCK(in ns) and rounding up to the next integer: WRmin[cycles] = Roundup(tWR[ns]/tCK[ns]). The WR value in the mode register must be programmed to be equal or larger than WRmin. The programmed WR value is used with tRP to determine tDAL.

Mode Register MR1

The Mode Register MR1 stores the data for enabling or disabling the DLL, output driver strength, RTT_Nom impedance, additive latency, write leveling enable, TDQS enable and Qoff.
The Mode Register 1 is written by asserting low on $\overline{CS}$, $\overline{RAS}$, $\overline{CAS}$, $\overline{WE}$, high on BA0, low on BA1 and BA2, while controlling the states of address pins according to the table below.

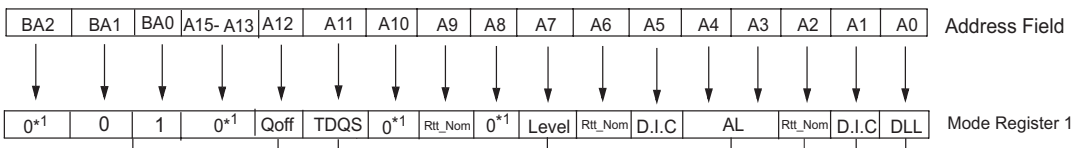

A11	TDQS enable
0	Disabled
1	Enabled

A7	Write leveling enable
0	Disabled
1	Enabled

A9	A6	A2	Rtt_Nom *3
0	0	0	ODT disabled
0	0	1	RZQ/4
0	1	0	RZQ/2
0	1	1	RZQ/6
1	0	0	RZQ/12*4
1	0	1	RZQ/8*4
1	1	0	Reserved
1	1	1	Reserved

Note : RZQ = 240 ohms

A0	DLL Enable
0	Enable
1	Disable

A4	A3	Additive Latency
0	0	0 (AL disabled)
0	1	CL-1
1	0	CL-2
1	1	Reserved

*3: In Write leveling Mode (MR1[bit7] = 1) with MR1[bit12] = 1, all RTT_Nom settings are allowed; in Write Leveling Mode (MR1[bit7] = 1) with MR1[bit12] = 0, only RTT_Nom settings of RZQ/2, RZQ/4 and RZQ/6 are allowed.

*4: If RTT_Nom is used during Writes, only the values RZQ/2,RZQ/4 and RZQ/6 are allowed.

A12	Qoff *2
0	Output buffer enabled
1	Output buffer disabled *2

*2: Outputs disabled - DQs, DQSs, $\overline{DQSs}$.

A5	A1	Output Driver Impedance Control
0	0	RZQ/6
0	1	RZQ/7
1	0	Reserved
1	1	Reserved

Note : RZQ = 240 ohms

BA1	BA0	MRS mode
0	0	MR0
0	1	MR1
1	0	MR2
1	1	MR3

* 1 : BA2, A8, A10, A13, A14 and A15 are reserved for future use (RFU) and must be programmed to 0 during MRS.

Mode Register MR2

The Mode Register MR2 stores the data for controlling refresh related features, RTT_WR impedance and CAS write latency (CWL). The Mode Register 2 is written by asserting low on $\overline{CS}$, $\overline{RAS}$, $\overline{CAS}$, $\overline{WE}$, high on BA1, low on BA0 and BA2, while controlling the states of address pins according to the table below.

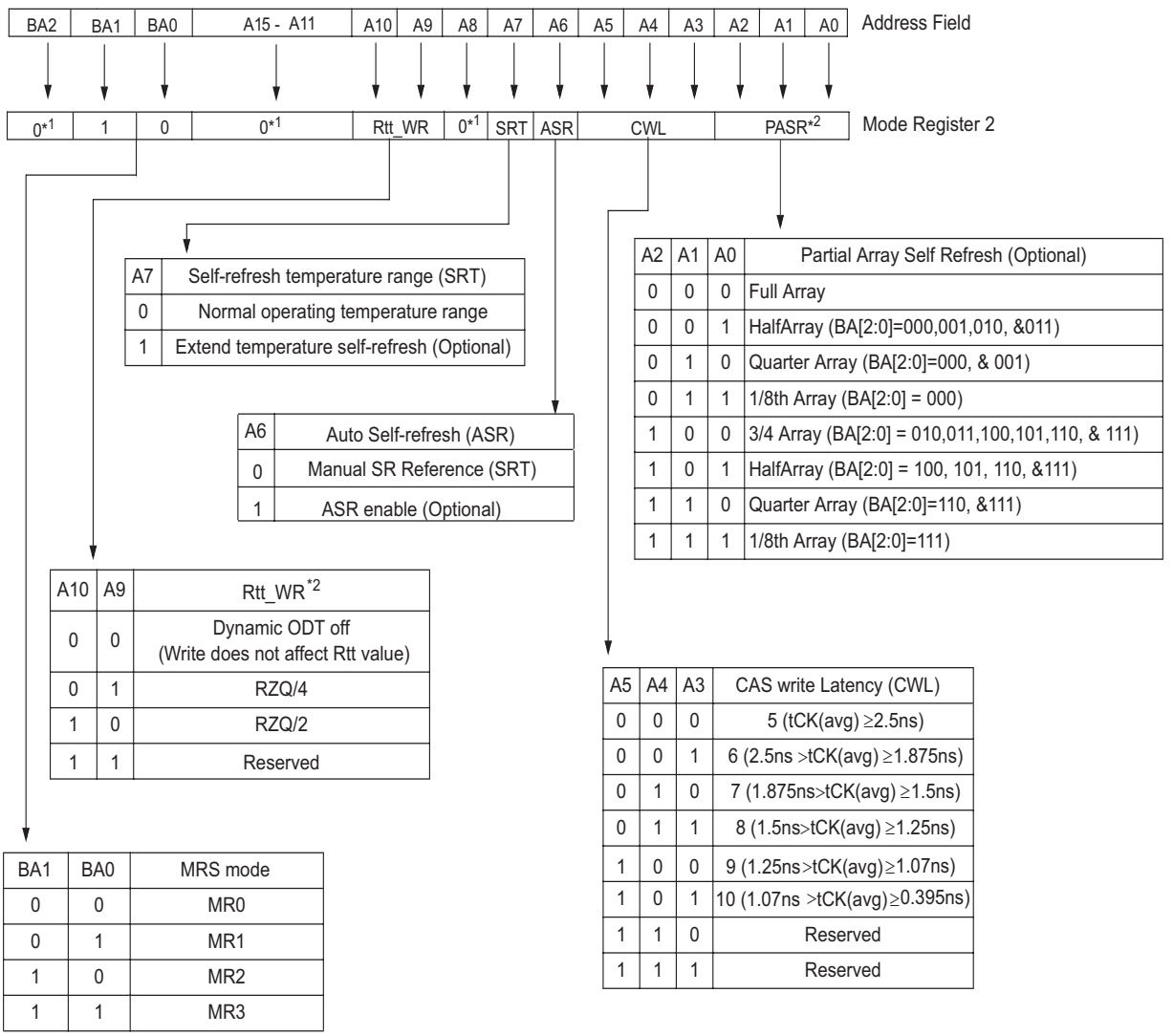

A7	Self-refresh temperature range (SRT)
0	Normal operating temperature range
1	Extend temperature self-refresh (Optional)

A6	Auto Self-refresh (ASR)
0	Manual SR Reference (SRT)
1	ASR enable (Optional)

A2	A1	A0	Partial Array Self Refresh (Optional)
0	0	0	Full Array
0	0	1	HalfArray (BA[2:0]=000,001,010, &011)
0	1	0	Quarter Array (BA[2:0]=000, & 001)
0	1	1	1/8th Array (BA[2:0] = 000)
1	0	0	3/4 Array (BA[2:0] = 010,011,100,101,110, & 111)
1	0	1	HalfArray (BA[2:0] = 100, 101, 110, &111)
1	1	0	Quarter Array (BA[2:0]=110, &111)
1	1	1	1/8th Array (BA[2:0]=111)

A10	A9	Rtt_WR *2
0	0	Dynamic ODT off (Write does not affect Rtt value)
0	1	RZQ/4
1	0	RZQ/2
1	1	Reserved

A5	A4	A3	CAS write Latency (CWL)
0	0	0	5 (tCK(avg) ≥2.5ns)
0	0	1	6 (2.5ns >tCK(avg) ≥1.875ns)
0	1	0	7 (1.875ns>tCK(avg) ≥1.5ns)
0	1	1	8 (1.5ns>tCK(avg) ≥1.25ns)
1	0	0	9 (1.25ns>tCK(avg)≥1.07ns)
1	0	1	10 (1.07ns >tCK(avg)≥0.395ns)
1	1	0	Reserved
1	1	1	Reserved

BA1	BA0	MRS mode
0	0	MR0
0	1	MR1
1	0	MR2
1	1	MR3

* 1 : BA2, A8, A11 ~ A15 are RFU and must be programmed to 0 during MRS.
* 2 : The Rtt_WR value can be applied during writes even when Rtt_Nom is disabled.
During write leveling, Dynamic ODT is not available.

Mode Register MR3

The Mode Register MR3 controls Multi Purpose Registers (MPR). The Mode Register 3 is written by asserting low on $\overline{CS}$, $\overline{RAS}$, $\overline{CAS}$, $\overline{WE}$, high on BA1 and BA0, and low on BA2 while controlling the states of address pins according to the table below.

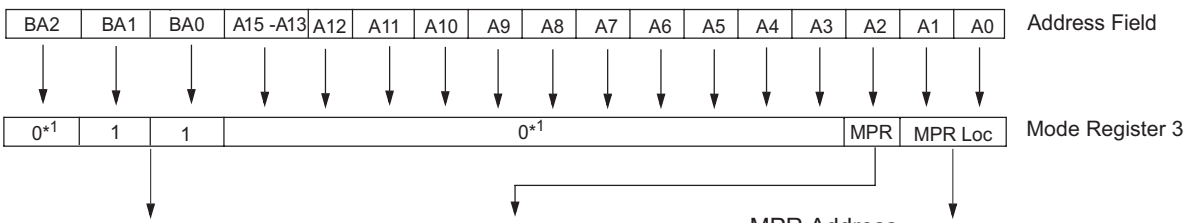

BA1	BA0	MRS mode
0	0	MR0
0	1	MR1
1	0	MR2
1	1	MR3

MPR Operation

A2	MPR
0	Normal operation*3
1	Dataflow from MPR

MPR Address

A1	A0	MPR location
0	0	Predefined pattern*2
0	1	RFU
1	0	RFU
1	1	RFU

* 1 : BA2, A3 - A15 are reserved for future use (RFU) and must be programmed to 0 during MRS.
* 2 : The predefined pattern will be used for read synchronization.
* 3 : When MPR control is set for normal operation, MR3 A[2] = 0, MR3 A[1:0] will be ignored

Burst Length (MR0)

Read and write accesses to the DDR3 are burst oriented, with the burst length being programmable, as shown in the figure MR0 Programming. The burst length determines the maximum number of column locations that can be accessed for a given read or write command. Burst length options include fixed BC4, fixed BL8, and on the fly which allows BC4 or BL8 to be selected coincident with the registration of a read on write command Via A12 ($\overline{BC}$). Reserved states should not be used, as unknown operation or incompatibility with future versions may result.

Burst Chop

In case of burst length being fixed to 4 by MR0 setting, the internal write operation starts two clock cycles earlier than for the BL8 mode. This means that the starting point for tWR and tWTR will be pulled in by two clocks. In case of burst length being selected on the fly via A12($\overline{BC}$), the internal write operation starts at the same point in time like a burst of 8 write operation. This means that during on-the-fly control, the starting point for tWR and tWTR will not be pulled in by two clocks.

Burst Type (MR0)

[Burst Length and Sequence]

Burst length	Operation	Starting address (A2, A1, A0)	Sequential addressing (decimal)	Interleave addressing (decimal)
4 (Burst chop)	READ	000	0, 1, 2, 3, T, T, T, T	0, 1, 2, 3, T, T, T, T
		001	1, 2, 3, 0, T, T, T, T	1, 0, 3, 2, T, T, T, T
		010	2, 3, 0, 1, T, T, T, T	2, 3, 0, 1, T, T, T, T
		011	3, 0, 1, 2, T, T, T, T	3, 2, 1, 0, T, T, T, T
		100	4, 5, 6, 7, T, T, T, T	4, 5, 6, 7, T, T, T, T
		101	5, 6, 7, 4, T, T, T, T	5, 4, 7, 6, T, T, T, T
		110	6, 7, 4, 5, T, T, T, T	6, 7, 4, 5, T, T, T, T
		111	7, 4, 5, 6, T, T, T, T	7, 6, 5, 4, T, T, T, T
	WRITE	0VV	0, 1, 2, 3, X, X, X, X	0, 1, 2, 3, X, X, X, X
		1VV	4, 5, 6, 7, X, X, X, X	4, 5, 6, 7, X, X, X, X
8	READ	000	0, 1, 2, 3, 4, 5, 6, 7	0, 1, 2, 3, 4, 5, 6, 7
		001	1, 2, 3, 0, 5, 6, 7, 4	1, 0, 3, 2, 5, 4, 7, 6
		010	2, 3, 0, 1, 6, 7, 4, 5	2, 3, 0, 1, 6, 7, 4, 5
		011	3, 0, 1, 2, 7, 4, 5, 6	3, 2, 1, 0, 7, 6, 5, 4
		100	4, 5, 6, 7, 0, 1, 2, 3	4, 5, 6, 7, 0, 1, 2, 3
		101	5, 6, 7, 4, 1, 2, 3, 0	5, 4, 7, 6, 1, 0, 3, 2
		110	6, 7, 4, 5, 2, 3, 0, 1	6, 7, 4, 5, 2, 3, 0, 1
		111	7, 4, 5, 6, 3, 0, 1, 2	7, 6, 5, 4, 3, 2, 1, 0
	WRITE	VVV	0, 1, 2, 3, 4, 5, 6, 7	0, 1, 2, 3, 4, 5, 6, 7

Remark: T: Output driver for data and strobes are in high impedance.
V: A valid logic level (0 or 1), but respective buffer input ignores level on input pins.
X: Don’t Care.

Notes: 1. Page length is a function of I/O organization and column addressing
2. 0...7 bit number is value of CA [2:0] that causes this bit to be the first read during a burst.

Command Truth Table

(a) Note 1,2,3,4 apply to the entire Command truth table
(b) Note 5 applies to all Read/Write commands.
[BA=Bank Address, RA=Row Address, CA=Column Address, $\overline{BC}$=Burst Chop, X=Don't care, V=Valid]

Function	Abbreviation	CKE Previous Cycle	CKE Current Cycle	$\overline{CS}$	$\overline{RAS}$	$\overline{CAS}$	$\overline{WE}$	BA0 - BA2	A13 - A15	A12 / $\overline{BC}$	A10 / AP	A0 - A9,A11	Notes
Mode Register Set	MRS	H	H	L	L	L	L	BA	OP Code				
Refresh	REF	H	H	L	L	L	H	V	V	V	V	V	
Self Refresh Entry	SRE	H	L	L	L	L	H	V	V	V	V	V	7,9,12
Self Refresh Exit	SRX	L	H	H	X	X	X	X	X	X	X	X	7,8,9,12
				L	H	H	H	V	V	V	V	V	
Single Bank Precharge	PRE	H	H	L	L	H	L	BA	V	V	L	V	
Precharge all Banks	PREA	H	H	L	L	H	L	V	V	V	H	V	
Bank Activate	ACT	H	H	L	L	H	H	BA	Row Address (RA)				
Write (Fixed BL8 or BL4)	WR	H	H	L	H	L	L	BA	RFU	V	L	CA	
Write (BL4, on the Fly)	WRS4	H	H	L	H	L	L	BA	RFU	L	L	CA	
Write (BL8, on the Fly)	WRS8	H	H	L	H	L	L	BA	RFU	H	L	CA	
Write with Auto Precharge (Fixed BL8 or BL4)	WRA	H	H	L	H	L	L	BA	RFU	V	H	CA	
Write with Auto Precharge (BL4, on the Fly)	WRAS4	H	H	L	H	L	L	BA	RFU	L	H	CA	
Write with Auto Precharge (BL8, on the Fly)	WRAS8	H	H	L	H	L	L	BA	RFU	H	H	CA	
Read (Fixed BL8 or BL4)	RD	H	H	L	H	L	H	BA	RFU	V	L	CA	
Read (BL4, on the Fly)	RDS4	H	H	L	H	L	H	BA	RFU	L	L	CA	
Read (BL8, on the Fly)	RDS8	H	H	L	H	L	H	BA	RFU	H	L	CA	
Read with Auto Precharge (Fixed BL8 or BL4)	RDA	H	H	L	H	L	H	BA	RFU	V	H	CA	
Read with Auto Precharge (BL4, on the Fly)	RDAS4	H	H	L	H	L	H	BA	RFU	L	H	CA	
Read with Auto Precharge (BL8, on the Fly)	RDAS8	H	H	L	H	L	H	BA	RFU	H	H	CA	
No Operation	NOP	H	H	L	H	H	H	V	V	V	V	V	10
Device Deselected	DES	H	H	H	X	X	X	X	X	X	X	X	11
ZQ calibration Long	ZQCL	H	H	L	H	H	L	X	X	X	H	X	
ZQ calibration Short	ZQCS	H	H	L	H	H	L	X	X	X	L	X	
Power Down Entry	PDE	H	L	L	H	H	H	V	V	V	V	V	6,12
				H	X	X	X	X	X	X	X	X	
Power Down Exit	PDX	L	H	L	H	H	H	V	V	V	V	V	6,12
				H	X	X	X	X	X	X	X	X	

Note :
1. All DDR3 SDRAM commands are defined by states of $\overline{CS}$, $\overline{RAS}$, $\overline{CAS}$, $\overline{WE}$ and CKE at the rising edge of the clock. The MSB of BA, RA, and CA are device density and configuration dependant
2. $\overline{RESET}$ is Low enable command which will be used only for asynchronous reset so must be maintained HIGH during any function.
3. Bank addresses (BA) determine which bank is to be operated upon. For (E)MRS BA selects an (Extended) Mode Register
4. "V" means "H or L (but a defined logic level)" and "X" means either "defined or undefined (like floating) logic level"
5. Burst reads or writes cannot be terminated or interrupted and Fixed/on the fly BL will be defined by MRS
6. The Power Down Mode does not perform any refresh operations.
7. The state of ODT does not affect the states described in this table. The ODT function is not available during Self Refresh.
8. Self refresh exit is asynchronous.
9. V_{REF}(Both V_{REFDQ} and V_{REFCA}) must be maintained during Self Refresh operation.
10. The No Operation command (NOP) should be used in cases when the DDR3 SDRAM is in an idle or a wait state. The purpose of the No Operation command (NOP) is to prevent the DDR3 SDRAM from registering any unwanted commands between operations. A No Operation command will not terminate a previous operation that is still executing, such as a burst read or write cycle.
11. The Deselect command performs the same function as a No Operation command.
12. Refer to the CKE Truth Table for more detail with CKE transition

CKE Truth Table

(a) Note 1~7 apply to the entire Command truth table

(b) CKE low is allowed only if tMRD and tMOD are satisfied

Current State [2]	CKE		Command (N) [3]	Action (N)[3]	Notes
	Previous Cycle [1] (N-1)	Current Cycle [1] (N)	$\overline{RAS}$, $\overline{CAS}$, $\overline{WE}$, $\overline{CS}$		
Power Down	L	L	X	Maintain Power-Down	14, 15
	L	H	DESELECT or NOP	Power Down Exit	11, 14
Self Refresh	L	L	X	Maintain Self Refresh	15, 16
	L	H	DESELECT or NOP	Self Refresh Exit	8, 12, 16
Bank(s) Active	H	L	DESELECT or NOP	Active Power Down Entry	11, 13, 14
Reading	H	L	DESELECT or NOP	Power Down Entry	11, 13, 14, 17
Writing	H	L	DESELECT or NOP	Power Down Entry	11, 13, 14, 17
Precharging	H	L	DESELECT or NOP	Power Down Entry	11, 13, 14, 17
Refreshing	H	L	DESELECT or NOP	Precharge Power Down Entry	11
All Banks Idle	H	L	DESELECT or NOP	Precharge Power Down Entry	11,13, 14, 18
	H	L	REFRESH	Self Refresh Entry	9, 13, 18
For more details with all signals See "Command Truth Table," on previous page					10

Notes:

1. CKE (N) is the logic state of CKE at clock edge N; CKE (N–1) was the state of CKE at the previous clock edge.
2. Current state is defined as the state of the DDR3 SDRAM immediately prior to clock edge N
3. COMMAND (N) is the command registered at clock edge N, and ACTION (N) is a result of COMMAND (N), ODT is not included here
4. All states and sequences not shown are illegal or reserved unless explicitly described elsewhere in this document
5. The state of ODT does not affect the states described in this table. The ODT function is not available during Self Refresh
6. CKE must be registered with the same value on tCKEmin consecutive positive clock edges. CKE must remain at the valid input level the entire time it takes to achieve the tCKEmin clocks of registeration. Thus, after any CKE transition, CKE may not transition from its valid level during the time period of tIS + tCKEmin + tIH.
7. DESELECT and NOP are defined in the Command truth table
8. On Self Refresh Exit DESELECT or NOP commands must be issued on every clock edge occurring during the tXS period. Read or ODT commands may be issued only after tXSDLL is satisfied.
9. Self Refresh mode can only be entered from the All Banks Idle state.
10. Must be a legal command as defined in the Command Truth Table.
11. Valid commands for Power Down Entry and Exit are NOP and DESELECT only.
12. Valid commands for Self Refresh Exit are NOP and DESELECT only.
13. Self Refresh can not be entered while Read or Write operations. See 'Self-Refresh Operation" and 'Power-Down Modes" on later section for a detailed list of restrictions.
14. The Power Down does not perform any refresh operations.
15. "X" means "don't care (including floating around V_{REF})" in Self Refresh and Power Down. It also applies to Address pins
16. V_{REF} (Both V_{REFDQ} and V_{REFCA}) must be maintained during Self Refresh operation.
17. If all banks are closed at the conclusion of the read, write or precharge command, then Precharge Power Down is entered, otherwise Active Power Down is entered
18. 'Idle state' means that all banks are closed(tRP,tDAL,etc. satisfied) and CKE is high and all timings from previous operations are satisfied (tMRD,tMOD,tRFC,tZQinit,tZQoper,tZQCS,etc)as well as all SRF exit and Power Down exit parameters are satisfied (tXS,tXP,tXPDLL,etc)

Absolute Maximum DC Ratings

Symbol	Parameter	Rating	Units	Notes
VDD	Voltage on VDD pin relative to Vss	-0.4 V ~ 1.975 V	V	1,3
VDDQ	Voltage on VDDQ pin relative to Vss	-0.4 V ~ 1.975 V	V	1,3
VIN, VOUT	Voltage on any pin relative to Vss	-0.4 V ~ 1.975 V	V	1
T_{STG}	Storage Temperature	-55 to +100	°C	1,2

NOTE :
1. Stresses greater than those listed under “Absolute Maximum Ratings” may cause permanent damage to the device. This is a stress rating only and functional operation of the device at these or any other conditions above those indicated in the operational sections of this specification is not implied. Exposure to absolute maximum rating conditions for extended periods may affect reliability.
2. Storage Temperature is the case surface temperature on the center/top side of the DRAM. For the measurement conditions, please refer to JESD51-2 standard.
3. VDD and VDDQ must be within 300mV of each other at all times;and VREF must be not greater than 0.6 x VDDQ, When VDD and VDDQ are less than 500mV; VREF may be equal to or less than 300mV.

Operating Temperature Condition

Symbol	Parameter	Rating	Units	Notes
T_C	Operating case temperature	0 to +95	°C	1,2,3

NOTE :
1. Operating temperature is the case surface temperature on the center/top side of the DRAM.
2. The Normal Temperature Range specifies the temperatures where all DRAM specifications will be supported. During operation, the DRAM case temperature must be maintained between 0°C to +85°C under all operating conditions.
3. Some applications require operation of the DRAM in the Extended Temperature Range between +85°C and +95°C case temperature. Full specifications are guaranteed in this range, but the following additional conditions apply:
   a) Refresh commands must be doubled in frequency, therefore reducing the refresh interval tREFI to 3.9μs. (This double refresh requirement may not apply for some devices.)
   b) If Self-refresh operation is required in the Extended Temperature Range, then it is mandatory to either use the Manual Self-Refresh mode with Extended Temperature Range capability (MR2 bit [A6, A7] = [0, 1]) or enable the optional Auto Self-Refresh mode (MR2 bit [A6, A7] = [1, 0]).

Recommended DC Operating Conditions

Symbol	Parameter	Operation Voltage	Rating			Units	Notes
			Min.	Typ.	Max.		
VDD	Supply voltage	1.35	1.283	1.35	1.45	V	1,2,3
		1.5	1.425	1.5	1.575	V	1,2,3
VDDQ	Supply voltage for Output	1.35	1.283	1.35	1.45	V	1,2,3
		1.5	1.425	1.5	1.575	V	1,2,3

NOTE :
1. Under all conditions VDDQ must be less than or equal to VDD.

2. VDDQ tracks with VDD. AC parameters are measured with VDD and VDDQ tied together.
3. VDD and VDDQ rating are determined by operation voltage.

AC and DC Input Measurement Levels

Single-Ended AC and DC Input Levels for Command and Address(1.35V)

Symbol	Parameter	Min.	Max.	Units	Notes
VIHCA (DC90)	DC input logic high	VREF + 0.090	VDD	V	1,5(a)
VILCA (DC90)	DC input logic low	VSS	VREF - 0.090	V	1,6(a)
VIHCA (AC160)	AC input logic high DDR3-1600,1333,1066,800	VREF + 0.160	-	V	1,2
	DDR3-1866	-	-		
VILCA (AC160)	AC input logic low DDR3-1600,1333,1066,800	-	VREF - 0.160	V	1,2
	DDR3-1866	-	-		
VIHCA (AC135)	AC input logic high	VREF + 0.135	-	V	1,2
VILCA (AC135)	AC input logic low	-	VREF - 0.135	V	1,2
VIHCA (AC125)	AC input logic high DDR3-1600,1333,1066,800	-	-	V	1,2
	DDR3-1866	VREF + 0.125	-		
VILCA (AC125)	AC input logic low DDR3-1600,1333,1066,800	-	-	V	1,2
	DDR3-1866	-	VREF - 0.125		
VREFCA (DC)	Reference voltage for ADD, CMD inputs	0.49 * VDD	0.51 * VDD	V	3,4

Single-Ended AC and DC Input Levels for Command and Address(1.5V)

Symbol	Parameter	Min.	Max.	Units	Notes
VIHCA (DC100)	DC input logic high	VREF + 0.100	VDD	V	1
VILCA (DC100)	DC input logic low	VSS	VREF - 0.100	V	1
VIHCA (AC175)	AC input logic high DDR3-1600,1333,1066,800	VREF + 0.175	-	V	1,2
	DDR3-1866	-	-		
VILCA (AC175)	AC input logic low DDR3-1600,1333,1066,800	-	VREF - 0.175	V	1,2
	DDR3-1866	-	-		
VIHCA (AC150)	AC input logic high DDR3-1600,1333,1066,800	VREF + 0.150	-	V	1,2
	DDR3-1866	-	-		

Symbol	Parameter	Min.	Max.	Units	Notes
V_{ILCA} (AC150)	AC input logic low DDR3-1600,1333,1066,800	-	V_{REF} - 0.150	V	1,2
	DDR3-1866	-	-		
V_{IHCA} (AC135)	AC input logic high DDR3-1600,1333,1066,800	-	-	V	1,2
	DDR3-1866	V_{REF} + 0.135	-		
V_{ILCA} (AC135)	AC input logic low DDR3-1600,1333,1066,800	-	-	V	1,2
	DDR3-1866	-	V_{REF} - 0.135		
V_{IHCA} (AC125)	AC input logic high DDR3-1600,1333,1066,800	-	-	V	1,2
	DDR3-1866	V_{REF} + 0.125	-		
V_{ILCA} (AC125)	AC input logic low DDR3-1600,1333,1066,800	-	-	V	1,2
	DDR3-1866	-	V_{REF} - 0.125		
V_{REFCA} (DC)	Reference voltage for ADD, CMD inputs	0.49 * VDD	0.51 * VDD	V	3,4

NOTE :
1. For input only pins except /RESET : V_{REF} = V_{REFCA} (DC).
2. See Overshoot and Undershoot Specifications section.
3. The AC peak noise on V_{REF} may not allow V_{REF} to deviate from V_{REFCA} (DC) by more than ±1% VDD (for reference : approx. ±15 mV).
4. For reference : approx. VDD/2 ±15 mV.
5. VIH(dc) is used as a simplified symbol for VIH.CA(a) 1.35V : DC90, b) 1.5V : DC100)
6. VIL(dc) is used as a simplified symbol for VIL.CA(a) 1.35V : DC90, b) 1.5V : DC100)
7. VIH(ac) is used as a simplified symbol for VIH.CA(AC175) and VIH.CA(AC150); VIH.CA(AC175) value is used when VREF + 175mV is referenced and VIH.CA(AC150) value is used when VREF + 150mV is referenced.
8. VIL(ac) is used as a simplified symbol for VIL.CA(AC175) and VIL.CA(AC150); VIL.CA(AC175) value is used when VREF - 175mV is referenced and VIL.CA(AC150) value is used when VREF - 150mV is referenced.

Single-Ended AC and DC Input Levels for DQ and DM(1.35V)

Symbol	Parameter	Min.	Max.	Units	Notes
VIHDQ (DC90)	DC input logic high	VREF + 0.090	VDD	V	1,5(a)
VILDQ (DC90)	DC input logic low	VSS	VREF - 0.090	V	1,6(a)
VIHDQ (AC160)	AC input logic high DDR3-1066, 800	VREF + 0.160	-	V	1,2
	DDR3-1866,1600,1333	-	-		
VILDQ (AC160)	AC input logic low DDR3-1600, 1333	-	VREF - 0.160	V	1,2
	DDR3-1866,1066, 800	-	-		
VIHDQ (AC135)	AC input logic high	VREF + 0.135	-	V	1,2
VILDQ (AC135)	AC input logic low	-	VREF - 0.135	V	1,2
VIHDQ (AC130)	AC input logic high DDR3-1600,1333,1066,800	-	-	V	1,2
	DDR3-1866	VREF + 0.130	-		
VILDQ (AC130)	AC input logic low DDR3-1600,1333,1066,800	-	-	V	1,2
	DDR3-1866	-	VREF - 0.130		
VREFDQ (DC)	Reference voltage for DQ, DM inputs	0.49 * VDD	0.51 * VDD	V	3,4

Single-Ended AC and DC Input Levels for DQ and DM(1.5V)

Symbol	Parameter	Min.	Max.	Units	Notes
VIHDQ (DC100)	DC input logic high	VREF + 0.100	VDD	V	1
VILDQ (DC100)	DC input logic low	VSS	VREF - 0.100	V	1
VIHDQ (AC175)	AC input logic high DDR3-1066, 800	VREF + 0.175	-	V	1,2
	DDR3-1866,1600, 1333	-	-		
VILDQ (AC175)	AC input logic low DDR3-1066, 800	-	VREF - 0.175	V	1,2
	DDR3-1866,1600, 1333	-	-		
VIHDQ (AC150)	AC input logic high DDR3-1600,1333,1066,800	VREF + 0.150	-	V	1,2
	DDR3-1866	-	-		
VILDQ (AC150)	AC input logic low DDR3-1600,1333,1066,800	-	VREF - 0.150	V	1,2
	DDR3-1866	-	-		

Symbol	Parameter	Min.	Max.	Units	Notes
V_{IHDQ} (AC135)	AC input logic high DDR3-1600,1333,1066,800	-	-	V	1,2
	DDR3-1866	V_{REF} + 0.135	-		
V_{ILDQ} (AC135)	AC input logic low DDR3-1600,1333,1066,800	-	-	V	1,2
	DDR3-1866	-	V_{REF} - 0.135		
V_{REFDQ} (DC)	Reference voltage for DQ, DM inputs	0.49 * VDD	0.51 * VDD	V	3,4

NOTE :
1. For DQ and DM : V_{REF} = V_{REFDQ} (DC).
2. See Overshoot and Undershoot Specifications section.
3. The AC peak noise on V_{REF} may not allow V_{REF} to deviate from V_{REFDQ} (DC) by more than ±1% VDD (for reference: approx. ±15 mV).
4. For reference: approx. VDD/2 ±15 mV.
5. VIH(dc) is used as a simplified symbol for VIH.DQ(a) 1.35V : DC90, b) 1.5V : DC100)
6. VIL(dc) is used as a simplified symbol for VIL.DQ(a) 1.35V : DC90, b) 1.5V : DC100)
7. VIH(ac) is used as a simplified symbol for VIH.DQ(AC175), VIH.DQ(AC150) ; VIH.DQ(AC175) value is used when VREF + 175mV is referenced, VIH.DQ(AC150) value is used when VREF + 150mV is referenced.
8. VIL(ac) is used as a simplified symbol for VIL.DQ(AC175), VIL.DQ(AC150) ; VIL.DQ(AC175) value is used when VREF - 175mV is referenced, VIL.DQ(AC150) value is used when VREF - 150mV is referenced.

VREF Tolerances

The dc-tolerance limits and ac-noise limits for the reference voltages VREFCA and VREFDQ are illustrate in figure VREF(DC) tolerance and VREF AC-Noise limits. It shows a valid reference voltage VREF(t) as a function of time. (VREF stands for VREFCA and VREFDQ likewise).

VREF(DC) is the linear average of VREF(t) over a very long period of time (e.g. 1 sec). This average has to meet the min/max requirement in Table of “Single-Ended AC and DC Input Levels for Command and Address”. Furthermore VREF(t) may temporarily deviate from VREF(DC) by no more than +/- 1% VDD.

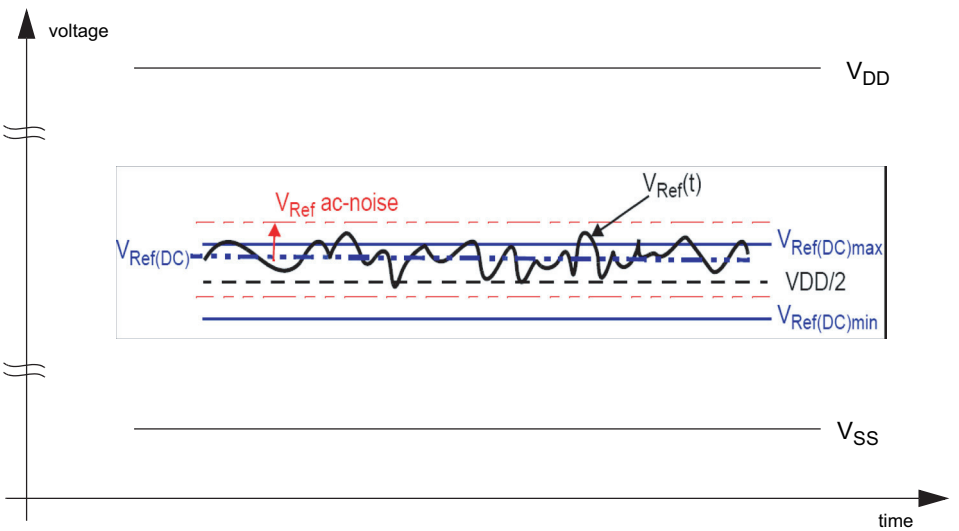

VREF(DC) tolerance and VREF AC-Noise limits

The voltage levels for setup and hold time measurements VIH(AC), VIH(DC), VIL(AC) and VIL(DC) are dependent on VREF.

"VREF" shall be understood as VREF(DC), as defined in figure above, VREF(DC) tolerance and VREF AC-Noise limits.

This clarifies, that DC-variations of VREF affect the absolute voltage a signal has to reach to achieve a valid high or low level and therefore the time to which setup and hold is measured. System timing and voltage budgets need to account for VREF(DC) deviations from the optimum position within the data-eye of the input signals.

This also clarifies that the DRAM setup/hold specification and derating values need to include time and voltage associated with VREF AC-noise. Timing and voltage effects due to AC-noise on VREF up to the specified limit (+/- 1% of VDD) are included in DRAM timings and their associated deratings.

AC and DC Logic Input Levels for Differential Signals

Differential signals definition

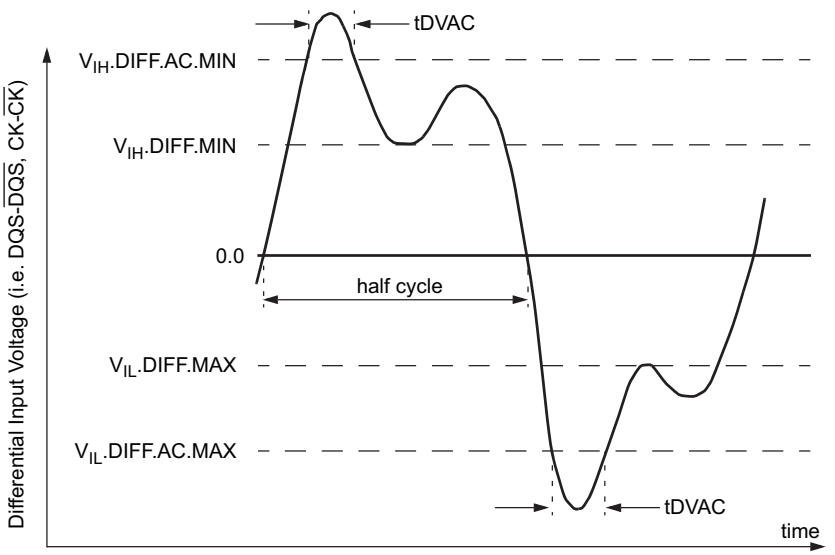

Definition of differential ac-swing and "time above ac level" tDVAC

Differential swing requirement for clock (CK - $\overline{CK}$) and strobe (DQS - $\overline{DQS}$)

Differential AC and DC Input Levels(1.35V)

Symbol	Parameter	Min.	Max.	Units	Notes
VIHdiff	Differential input high	+0.18	NOTE 3	V	1
VILdiff	Differential input low	NOTE 3	-0.18	V	1
VIHdiff(AC)	Differential input high AC	2 x (VIH(AC) - VREF)	NOTE 3	V	2
VILdiff(AC)	Differential input low AC	NOTE 3	2 x (VIL(AC) - VREF)	V	2

Differential AC and DC Input Levels(1.5V)

Symbol	Parameter	Min.	Max.	Units	Notes
VIHdiff	Differential input high	+0.2	NOTE 3	V	1
VILdiff	Differential input low	NOTE 3	-0.2	V	1
VIHdiff(AC)	Differential input high AC	2 x (VIH(AC) - VREF)	NOTE 3	V	2
VILdiff(AC)	Differential input low AC	NOTE 3	2 x (VIL(AC) - VREF)	V	2

NOTE :

1. Used to define a differential signal slew-rate.
2. for CK - $\overline{CK}$ use VIH/VIL(AC) of address/command and VREFCA; for strobes (DQS, $\overline{DQS}$) use VIH/VIL(AC) of DQs and VREFDQ; if a reduced ac-high or ac-low level is used for a signal group, then the reduced level applies also here.
3. These values are not defined, however the single-ended signals CK, $\overline{CK}$, DQS, $\overline{DQS}$ need to be within the respective limits (VIH(DC) max, VIL(DC)min) for single-ended signals as well as the limitations for overshoot and undershoot. Refer to "Overshoot and Undershoot specification".

Allowed time before ringback (tDVAC) for CK - $\overline{CK}$ and DQS - $\overline{DQS}$(1.35V)

	DDR3-800,1066,1333,1600				DDR3-1866					
Slew Rate [V/ns]	tDVAC [ps] @ |VIH/Ldiff(AC)| = 320mV		tDVAC [ps] @ |VIH/Ldiff(AC)| = 270mV		tDVAC [ps] @ |VIH/Ldiff(AC)| = 270mV		tDVAC [ps] @ |VIH/Ldiff(AC)| = 250mV		tDVAC [ps] @ |VIH/Ldiff(AC)| = 260mV	
	Min.	Max.	Min.	Max.	Min.	Max.	Min.	Max.	Min.	Max.
> 4.0	189	-	201	-	163	-	168	-	176	-
4.0	189	-	201	-	163	-	168	-	176	-
3.0	162	-	179	-	140	-	147	-	154	-
2.0	109	-	134	-	95	-	105	-	111	-
1.8	91	-	119	-	80	-	91	-	97	-
1.6	69	-	100	-	62	-	74	-	78	-
1.4	40	-	76	-	37	-	52	-	55	-
1.2	Note1	-	44	-	5	-	22	-	24	-
1.0	Note1	-	Note1	-	Note1	-	Note1	-	Note1	-
< 1.0	Note1	-	Note1	-	Note1	-	Note1	-	Note1	-

Allowed time before ringback (tDVAC) for CK - $\overline{CK}$ and DQS - $\overline{DQS}$(1.5V)

Slew Rate [V/ns]	tDVAC [ps] @ |VIH/Ldiff(AC)| = 350mV		tDVAC [ps] @ |VIH/Ldiff(AC)| = 300mV	
	Min.	Max.	Min.	Max.
> 4.0	75	-	175	-
4.0	57	-	170	-
3.0	50	-	167	-
2.0	38	-	163	-
1.8	34	-	162	-
1.6	29	-	161	-
1.4	22	-	159	-
1.2	13	-	155	-
1.0	0	-	150	-
< 1.0	0	-	150	-

NOTE:1.Rising input signal shall become equal to or greater than VIH(ac) level and Falling inputsignal shall become equal to or less than VIL(ac) level.

Single-ended requirements for differential signals

Each individual component of a differential signal (CK, DQS, $\overline{CK}$, $\overline{DQS}$) has also to comply with certain requirements for single-ended signals.

CK and $\overline{CK}$ have to approximately reach VSEH min / VSEL max [approximately equal to the AC-levels (VIH(AC) / VIL(AC)) for Address/command signals] in every half-cycle.

DQS, $\overline{DQS}$ have to reach VSEH min / VSEL max [approximately the ac-levels (VIH(AC) / VIL(AC)) for DQ signals] in every half-cycle proceeding and following a valid transition.

Note that the applicable AC-levels for Address/command and DQ's might be different per speed-bin etc. E.g. if VIH150(AC) / VIL150(AC) is used for Address/command signals, then these AC-levels apply also for the single-ended components of differential CK and $\overline{CK}$.

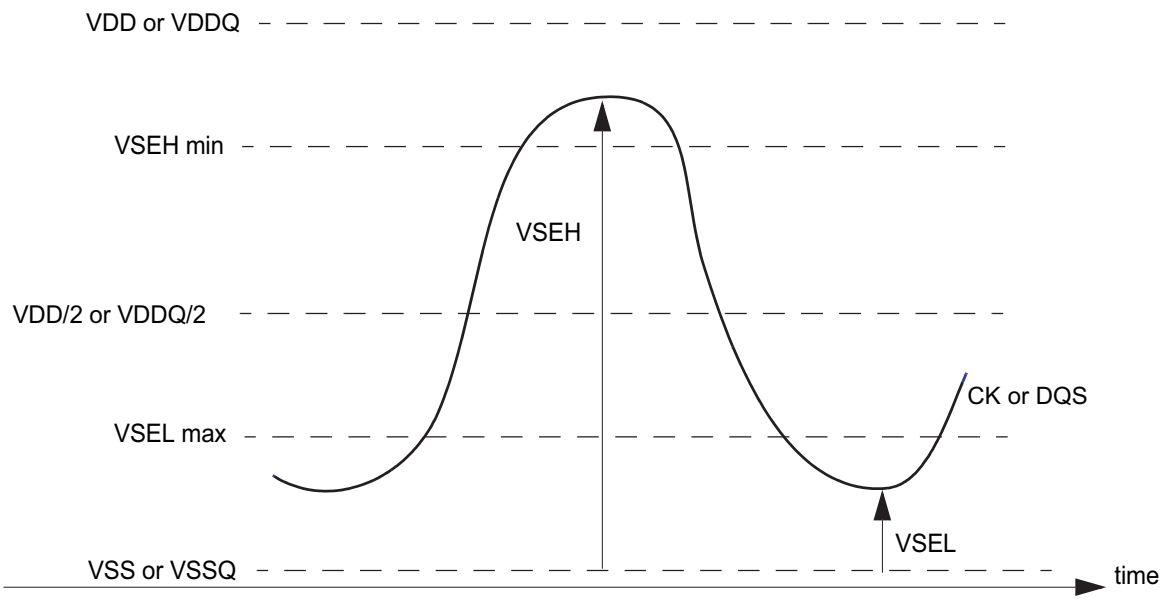

Single-ended requirement for differential signals

Note that while Address/command and DQ signal requirements are with respect to VREF, the single-ended components of differential signals have a requirement with respect to VDD/2; this is nominally the same. The transition of single-ended signals through the AC-levels is used to measure setup time. For single-ended components of differential signals the requirement to reach VSEL max, VSEH min has no bearing on timing, but adds a restriction on the common mode characteristics of these signals.

Single-ended levels for CK, DQS, $\overline{CK}$, $\overline{DQS}$

Symbol	Parameter	Min.	Max.	Units	Notes
VSEH	Single-ended high-level for strobes	(VDD/2) + 0.175	NOTE 3	V	1,2
	Single-ended high-level for CK, $\overline{CK}$	(VDD/2) + 0.175	NOTE 3	V	1,2
VSEL	Single-ended low-level for strobes	NOTE 3	(VDD/2) - 0.175	V	1,2
	Single-ended low-level for CK, $\overline{CK}$	NOTE 3	(VDD/2) - 0.175	V	1,2

NOTE :

1. For CK, $\overline{CK}$ use VIH/VIL(AC) of address/command; for strobes (DQS, $\overline{DQS}$) use VIH/VIL(AC) of DQs.
2. VIH(AC)/VIL(AC) for DQs is based on VREFDQ; VIH(AC)/VIL(AC) for address/command is based on VREFCA; if a reduced AC-high or AC-low level is used for a signal group, then the reduced level applies also here.
3. These values are not defined, however the single-ended components of differential signals CK, $\overline{CK}$, DQS, $\overline{DQS}$ need to be within the respective limits (VIH(DC) max, VIL(DC) min) for single-ended signals as well as the limitations for overshoot and undershoot. Refer to "Overshoot and Undershoot specifications".

To guarantee tight setup and hold times as well as output skew parameters with respect to clock and strobe, each cross point voltage of differential input signals (CK, $\overline{CK}$ and DQS, $\overline{DQS}$) must meet the requirements in below table. The differential input cross point voltage VIX is measured from the actual cross point of true and complement signal to the mid level between of VDD and VSS.

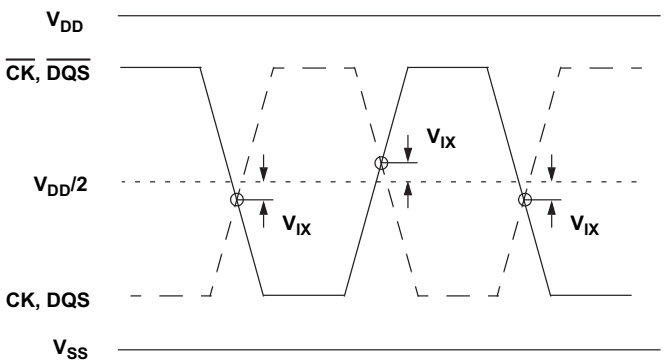

VIX Definition

Cross point voltage for differential input signals (CK, DQS): 1.35V

Symbol	Parameter	Min.	Max.	Units	Notes
VIX	Differential Input Cross Point Voltage relative to VDD/2 for CK, $\overline{CK}$	-150	150	mV	1
VIX	Differential Input Cross Point Voltage relative to VDD/2 for DQS, $\overline{DQS}$	-150	150	mV	

NOTE :1. The relation between Vix Min/Max and VSEL/VSEH should satisfy following.
(VDD/2) + Vix(Min) - VSEL >= 25mV
VSEH - ((VDD/2) + Vix(Max)) >= 25mV

Cross point voltage for differential input signals (CK, DQS): 1.5V

Symbol	Parameter	Min.	Max.	Units	Notes
VIX	Differential Input Cross Point Voltage relative to VDD/2 for CK, $\overline{CK}$	-150	150	mV	
		-175	175	mV	1
VIX	Differential Input Cross Point Voltage relative to VDD/2 for DQS, $\overline{DQS}$	-150	150	mV	

NOTE :1. Extended range for VIX is only allowed for clock and if single-ended clock input signals CKand CK are monotonic, have a single-ended swing VSEL / VSEH of at least VDD/2 +/- 250 mV, and the differential slew rate of CK-$\overline{CK}$ is larger than 3 V/ ns. Refer to the table of Cross point voltage for differential input signals (CK, DQS) for VSEL and VSEH standard values.

Differential input slew rate definition

Description	Measured		Defined by
	From	To	
Differential input slew rate for rising edge (CK-$\overline{CK}$ and DQS-$\overline{DQS}$)	VILdiff (max)	VIHdiff (min)	VIHdiff (min) - VILdiff (max) / Delta TRdiff
Differential input slew rate for falling edge (CK-$\overline{CK}$ and DQS-$\overline{DQS}$)	VIHdiff (min)	VILdiff (max)	VIHdiff (min) - VILdiff (max) / Delta TFdiff

NOTE : The differential signal (i.e. CK - $\overline{CK}$ and DQS - $\overline{DQS}$) must be linear between these thresholds.

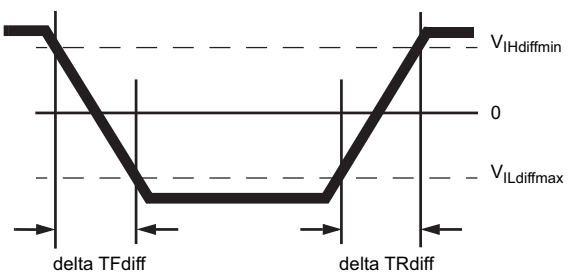

Differential Input Slew Rate definition for DQS, $\overline{DQS}$, and CK, $\overline{CK}$

IDD Specification

VDD, VDDQ = 1.35V (1.283V to 1.45V)

Conditions	Symbol	Data rate (Mbps)	IDD max.	Unit
Operating One Bank Active-Precharge Current; CKE: High; External clock: On; tCK, nRC, nRAS, CL: see timing used table; BL: 8; AL: 0; $\overline{CS}$: High between ACT and PRE; Command, Address: partially toggling; Data IO: FLOATING; DM:stable at 0; Bank Activity: Cycling with one bank active at a time; Output Buffer and RTT: Enabled in Mode Registers; ODT Signal: stable at 0	IDD0	1866 1600 1333 1066 800	49 47 47 47 47	mA
Operating One Bank Active-Read-Precharge Current; CKE: High; External clock: On; tCK, nRC, nRAS, nRCD, CL: see timing used table; BL: 81; AL: 0; $\overline{CS}$: High between ACT, RD and PRE; Command, Address, Data IO: partially toggling; DM:stable at 0; Bank Activity: Cycling with one bank active at a time; Output Buffer and RTT: Enabled in Mode Registers; ODT Signal: stable at 0	IDD1	1866 1600 1333 1066 800	64 61 61 61 61	mA
Precharge Power-Down Current Slow Exit; CKE: Low; External clock: On; tCK, CL: see timing used table; BL: 8; AL: 0; $\overline{CS}$: stable at 1; Command, Address: stable at 0; Data IO: FLOATING; DM: stable at 0; Bank Activity: all banks closed; Output Buffer and RTT: Enabled in Mode Registers; ODT Signal: stable at 0; Pre-charge Power Down Mode: Slow Exit	IDD2P0	1866 1600 1333 1066 800	8	mA
Precharge Power-Down Current Fast Exit; CKE: Low; External clock: On; tCK, CL: see timing used table; BL: 8; AL: 0; $\overline{CS}$: stable at 1; Command, Address: stable at 0; Data IO: FLOATING; DM:stable at 0; Bank Activity: all banks closed; Output Buffer and RTT: Enabled in Mode Registers; ODT Signal: stable at 0; Pre-charge Power Down Mode: Fast Exit	IDD2P1	1866 1600 1333 1066 800	16 14 14 14 14	mA
Precharge Standby Current; CKE: High; External clock: On; tCK, CL: see timing used table; BL: 8; AL: 0; $\overline{CS}$: stable at 1; Command, Address: partially toggling; Data IO: FLOATING; DM:stable at 0; Bank Activity: all banks closed; Output Buffer and RTT: Enabled in Mode Registers; ODT Signal: stable at 0	IDD2N	1866 1600 1333 1066 800	26 24 24 24 24	mA
Precharge Standby ODT Current; CKE: High; External clock: On; tCK, CL: see timing used table; BL: 8; AL: 0; $\overline{CS}$: stable at 1; Command, Address: partially toggling; Data IO: FLOATING; DM:stable at 0; Bank Activity: all banks closed; Output Buffer and RTT: Enabled in Mode Registers; ODT Signal: toggling	IDD2NT	1866 1600 1333 1066 800	30 28 28 28 28	mA
Precharge Quiet Standby Current; CKE: High; External clock: On; tCK, CL: see timing used table; BL: 8; AL: 0; $\overline{CS}$: stable at 1; Command, Address: stable at 0; Data IO: FLOATING; DM: stable at 0; Bank Activity: all banks closed; Output Buffer and RTT: Enabled in Mode Registers; ODT Signal: stable at 0	IDD2Q	1866 1600 1333 1066 800	26 24 24 24 24	mA
Active Power-Down Current; CKE: Low; External clock: On; tCK, CL: see timing used table; BL: 8; AL: 0; $\overline{CS}$: stable at 1; Command, Address: stable at 0; Data IO: FLOATING; DM: stable at 0; Bank Activity: all banks open; Output Buffer and RTT: Enabled in Mode Registers; ODT Signal: stable at 0	IDD3P	1866 1600 1333 1066 800	28 26 26 26 26	mA

Conditions	Symbol	Data rate (Mbps)	IDD max.	Unit
Active Standby Current; CKE: High; External clock: On; tCK, CL: see timing used table; BL: 8; AL: 0; $\overline{CS}$: stable at 1; Command, Address: partially toggling; Data IO: FLOATING; DM: stable at 0; Bank Activity: all banks open; Output Buffer and RTT: Enabled in Mode Registers; ODT Signal: stable at 0	IDD3N	1866 1600 1333 1066 800	32 30 30 30 30	mA
Operating Burst Read Current; CKE: High; External clock: On; tCK, CL: see timing used table; BL: 8; AL: 0; $\overline{CS}$: High between RD; Command, Address: par-tially toggling; Data IO: seamless read data burst with different data between one burst and the next one; DM: stable at 0; Bank Activity: all banks open, RD commands cycling through banks: 0,0,1,1,2,2,...; Output Buffer and RTT: Enabled in Mode Registers; ODT Signal: stable at 0	IDD4R	1866 1600 1333 1066 800	105 95 95 95 95	mA
Operating Burst Write Current; CKE: High; External clock: On; tCK, CL: see timing used table; BL: 8; AL: 0; $\overline{CS}$: High between WR; Command, Address: par-tially toggling; Data IO: seamless write data burst with different data between one burst and the next one; DM: stable at 0; Bank Activity: all banks open, WR commands cycling through banks: 0,0,1,1,2,2,...; Output Buffer and RTT: Enabled in Mode Registers; ODT Signal: stable at HIGH	IDD4W	1866 1600 1333 1066 800	180 175 175 175 175	mA
Burst Refresh Current; CKE: High; External clock: On; tCK, CL, nRFC: see timing used table; BL: 8; AL: 0; $\overline{CS}$: High between REF; Command, Address: partially toggling; Data IO: FLOATING; DM:stable at 0; Bank Activity: REF command every nRFC; Output Buffer and RTT: Enabled in Mode Registers; ODT Signal: stable at 0	IDD5B	1866 1600 1333 1066 800	242 235 235 235 235	mA
Self Refresh Current: Normal Temperature Range; TCASE: 0- 85°C; Auto Self-Re-fresh (ASR): Disabled; Self-Refresh Temperature Range (SRT): Normal; CKE: Low; Ex-ternal clock: Off; CK and $\overline{CK}$: LOW; CL: see timing used table; BL: 8; AL: 0; $\overline{CS}$, Command, Address, Data IO: FLOATING; DM: stable at 0; Bank Activity: Self-Refresh op-eration; Output Buffer and RTT: Enabled in Mode Registers; ODT Signal: FLOATING	IDD6	1866 1600 1333 1066 800	12	mA
Self Refresh Current: Extended Temperature Range; TCASE: 0- 95°C; Auto Self-Re-fresh (ASR): Disabled; Self-Refresh Temperature Range (SRT): Extended; CKE: Low; Ex-ternal clock: Off; CK and $\overline{CK}$: LOW; CL: see timing used table; BL: 8; AL: 0; $\overline{CS}$, Command, Address, Data IO: FLOATING; DM: stable at 0; Bank Activity: Extended Tem-perature Self-Refresh operation; Output Buffer and RTT: Enabled in Mode Registers; ODT Signal: FLOATING	IDD6ET	1866 1600 1333 1066 800	16	mA
Operating Bank Interleave Read Current; CKE: High; External clock: On; tCK, nRC, nRAS, nRCD, nRRD, nFAW, CL: see timing used table; BL: 8; AL: CL-1; CS: High be-tween ACT and RDA; Command, Address: partially toggling; Data IO: read data bursts with different data between one burst and the next one; DM: stable at 0; Bank Activity: two times interleaved cycling through banks (0, 1, ...7) with different addressing; Output Buffer and RTT: Enabled in Mode Registers; ODT Signal: stable at 0	IDD7	1866 1600 1333 1066 800	140 130 130 130 130	mA
RESET Low Current; RESET: Low; External clock: off; CK and CK: LOW; CKE: FLOAT-ING; CS, Command, Address, Data IO: FLOATING; ODT Signal : FLOATING	IDD8	1866 1600 1333 1066 800	10	mA

NOTE :

1) Burst Length: BL8 fixed by MRS: set MR0 A[1,0]=00B

2) Output Buffer Enable: set MR1 A[12] = 0B; set MR1 A[5,1] = 01B; RTT_Nom enable: set MR1 A[9,6,2] = 011B;

RTT_Wr enable: set MR2 A[10,9] = 10B
3) Precharge Power Down Mode: set MR0 A12=0B for Slow Exit or MR0 A12=1B for Fast Exit
4) Auto Self-Refresh (ASR): set MR2 A6 = 0B to disable or 1B to enable feature
5) Self-Refresh Temperature Range (SRT): set MR2 A7=0B for normal or 1B for extended temperature range
6) Refer to DRAM supplier data sheet and/or DIMM SPD to determine if optional features or requirements are supported by DDR3 SDRAM
7) Read Burst type : Nibble Sequential, set MR0 A[3]=0B

Timing used for IDD and IDDQ Measured - Loop Patterns

Speed	**DDR3-800**	**DDR3-1066**	**DDR3-1333**	**DDR3-1600**	**DDR3-1866**	Unit
CL-nRCD-nRP	**6-6-6**	**7-7-7**	**9-9-9**	**11-11-11**	**13-13-13**	
tCKmin	2.5	1.875	1.5	1.25	1.07	ns
CL	6	7	9	11	13	nCK
tRCDmin	6	7	9	11	13	nCK
tRCmin	21	27	33	39	45	nCK
tRASmin	15	20	24	28	32	nCK
tRPmin	6	7	9	11	13	nCK
tFAW	16	20	20	24	26	nCK
tRRD	4	4	4	5	5	nCK
tRFC	104	139	174	208	243	nCK

DDR3-800 Speed Bins

Speed Bin				- G6 (DDR3-800)		Unit	Notes
CL-nRCD-nRP				6-6-6			
Parameter			Symbol	Min	Max		
Internal read command to first data			tAA	15	20	ns	
Active to read or write delay time			tRCD	15	-	ns	
Precharge command period			tRP	15	-	ns	
Active to active/auto-refresh command time			tRC	52.5	-	ns	
Active to precharge command period			tRAS	37.5	9 * tREFI	ns	9
Average Clock Cycle Time	CL = 5	CWL = 5	tCK(avg)	3.0	3.3	ns	1,2,3,4
	CL = 6	CWL = 5	tCK(avg)	2.5	3.3	ns	1,2,3
Supported CL setting				5, 6		nCK	
Supported CWL setting				5		nCK	

DDR3-1066 Speed Bins

Speed Bin				- H7 (DDR3-1066)		Unit	Notes
CL-nRCD-nRP				7-7-7			
Parameter			Symbol	Min	Max		
Internal read command to first data			tAA	13.125	20	ns	
Active to read or write delay time			tRCD	13.125	-	ns	
Precharge command period			tRP	13.125	-	ns	
Active to active/auto-refresh command time			tRC	50.625	-	ns	
Active to precharge command period			tRAS	37.5	9 * tREFI	ns	9
Average Clock Cycle Time	CL = 5	CWL = 5	tCK(avg)	3.0	3.3	ns	1,2,3,5
		CWL = 6	tCK(avg)	Reserved	Reserved	ns	4
	CL = 6	CWL = 5	tCK(avg)	2.5	3.3	ns	1,2,3,5
		CWL = 6	tCK(avg)	Reserved	Reserved	ns	4
	CL = 7	CWL = 5	tCK(avg)	Reserved	Reserved	ns	4
		CWL = 6	tCK(avg)	1.875	< 2.5	ns	1,2,3
	CL = 8	CWL = 5	tCK(avg)	Reserved	Reserved	ns	4
		CWL = 6	tCK(avg)	1.875	< 2.5	ns	1,2,3
Supported CL setting				5, 6, 7, 8		nCK	
Supported CWL setting				5, 6		nCK	

DDR3-1333 Speed Bins

Speed Bin				- I9 (DDR3-1333)		Unit	Notes
CL-nRCD-nRP				9-9-9			
Parameter			Symbol	Min	Max		
Internal read command to first data			tAA	13.5 (13.125)	20	ns	10
Active to read or write delay time			tRCD	13.5 (13.125)	-	ns	10
Precharge command period			tRP	13.5 (13.125)	-	ns	10
Active to active/auto-refresh command time			tRC	49.5 (49.125)	-	ns	10
Active to precharge command period			tRAS	36	9 * tREFI	ns	9
Average Clock Cycle Time	CL = 5	CWL = 5	tCK(avg)	3.0	3.3	ns	1,2,3,6
		CWL = 6,7	tCK(avg)	Reserved	Reserved	ns	4
	CL = 6	CWL = 5	tCK(avg)	2.5	3.3	ns	1,2,3,6
		CWL = 6	tCK(avg)	Reserved	Reserved	ns	4
		CWL = 7	tCK(avg)	Reserved	Reserved	ns	4
	CL = 7	CWL = 5	tCK(avg)	Reserved	Reserved	ns	4
		CWL = 6	tCK(avg)	1.875	< 2.5	ns	1,2,3,6
		CWL = 7	tCK(avg)	Reserved	Reserved	ns	4
	CL = 8	CWL = 5	tCK(avg)	Reserved	Reserved	ns	4
		CWL = 6	tCK(avg)	1.875	< 2.5	ns	1,2,3,6
		CWL = 7	tCK(avg)	Reserved	Reserved	ns	4
	CL = 9	CWL = 5, 6	tCK(avg)	Reserved	Reserved	ns	4
		CWL = 7	tCK(avg)	1.5	< 1.875	ns	1,2,3
	CL = 10	CWL = 5, 6	tCK(avg)	Reserved	Reserved	ns	4
		CWL = 7	tCK(avg)	1.5	< 1.875	ns	1,2,3
Supported CL setting				5, 6, 7, 8, 9, 10		nCK	
Supported CWL setting				5, 6, 7		nCK	

DDR3-1600 Speed Bins

Speed Bin				- J11 (DDR3-1600)		Unit	Notes
CL-nRCD-nRP				11-11-11			
Parameter			Symbol	Min	Max		
Internal read command to first data			tAA	13.75 (13.125)	20	ns	10
Active to read or write delay time			tRCD	13.75 (13.125)	-	ns	10
Precharge command period			tRP	13.75 (13.125)	-	ns	10
Active to active/auto-refresh command time			tRC	48.75 (48.125)	-	ns	10
Active to precharge command period			tRAS	35	9 * tREFI	ns	9
Average Clock Cycle Time	CL = 5	CWL = 5	tCK(avg)	3.0	3.3	ns	1,2,3,7
		CWL = 6,7	tCK(avg)	Reserved	Reserved	ns	4
	CL = 6	CWL = 5	tCK(avg)	2.5	3.3	ns	1,2,3,7
		CWL = 6	tCK(avg)	Reserved	Reserved	ns	4
		CWL = 7	tCK(avg)	Reserved	Reserved	ns	4
	CL = 7	CWL = 5	tCK(avg)	Reserved	Reserved	ns	4
		CWL = 6	tCK(avg)	1.875	< 2.5	ns	1,2,3,7
		CWL = 7	tCK(avg)	Reserved	Reserved	ns	4
	CL = 8	CWL = 5	tCK(avg)	Reserved	Reserved	ns	4
		CWL = 6	tCK(avg)	1.875	< 2.5	ns	1,2,3,7
		CWL = 7	tCK(avg)	Reserved	Reserved	ns	4
	CL = 9	CWL = 5, 6	tCK(avg)	Reserved	Reserved	ns	4
		CWL = 7	tCK(avg)	1.5	1.875	ns	1,2,3,7
	CL = 10	CWL = 5, 6	tCK(avg)	Reserved	Reserved	ns	4
		CWL = 7	tCK(avg)	1.5	1.875	ns	1,2,3,7
		CWL = 8	tCK(avg)	Reserved	Reserved	ns	4
	CL = 11	CWL = 5, 6,7	tCK(avg)	Reserved	Reserved	ns	4
		CWL = 8	tCK(avg)	1.25	1.5	ns	1,2,3
Supported CL setting				5, 6, 7, 8, 9, 10,11		nCK	
Supported CWL setting				5, 6, 7, 8		nCK	

DDR3-1866 Speed Bins

Speed Bin				- K13 (DDR3-1866)		Unit	Notes
CL-nRCD-nRP				13-13-13			
Parameter			Symbol	Min	Max		
Internal read command to first data			tAA	13.91 (13.125)	20	ns	11
Active to read or write delay time			tRCD	13.91 (13.125)	-	ns	11
Precharge command period			tRP	13.91 (13.125)	-	ns	11
Active to active/auto-refresh command time			tRC	47.91 (47.125)	-	ns	11
Active to precharge command period			tRAS	34	9 * tREFI	ns	9
Average Clock Cycle Time	CL = 5	CWL = 5	tCK(avg)	3.0	3.3	ns	1,2,3,8
		CWL = 6,7	tCK(avg)	Reserved	Reserved	ns	4
	CL = 6	CWL = 5	tCK(avg)	2.5	3.3	ns	1,2,3,8
		CWL = 6	tCK(avg)	Reserved	Reserved	ns	4
		CWL = 7	tCK(avg)	Reserved	Reserved	ns	4
	CL = 7	CWL = 5	tCK(avg)	Reserved	Reserved	ns	4
		CWL = 6	tCK(avg)	1.875	2.5	ns	1,2,3,8
		CWL = 7	tCK(avg)	Reserved	Reserved	ns	1,2,3,8
	CL = 8	CWL = 5	tCK(avg)	Reserved	Reserved	ns	4
		CWL = 6	tCK(avg)	1.875	2.5	ns	1,2,3,8
		CWL = 7	tCK(avg)	Reserved	Reserved	ns	4
	CL = 9	CWL = 5, 6	tCK(avg)	Reserved	Reserved	ns	4
		CWL = 7	tCK(avg)	1.5	1.875	ns	1,2,3,8
	CL = 10	CWL = 5, 6	tCK(avg)	Reserved	Reserved	ns	4
		CWL = 7	tCK(avg)	1.5	1.875	ns	1,2,3,8
		CWL = 8	tCK(avg)	Reserved	Reserved	ns	4
	CL = 11	CWL = 5, 6,7	tCK(avg)	Reserved	Reserved	ns	4
		CWL = 8	tCK(avg)	1.25	1.5	ns	1,2,3,8
	CL = 12	CWL = 5, 6,7,8	tCK(avg)	Reserved	Reserved	ns	4
		CWL = 9	tCK(avg)	Reserved	Reserved	ns	4
	CL = 13	CWL = 5, 6,7,8	tCK(avg)	Reserved	Reserved	ns	4
		CWL = 9	tCK(avg)	1.07	1.25	ns	1,2,3
Supported CL setting				5, 6, 7, 8, 9, 10,11,13		nCK	
Supported CWL setting				5, 6, 7, 8, 9		nCK	

Speed Bin Table Notes

NOTE :

1. The CL setting and CWL setting result in tCK(avg) Min and tCK(avg) Max requirements. When making a selection of tCK(avg), both need to be fulfilled: Requirements from CL setting as well as requirements from CWL setting.
2. tCK(avg) Min limits: Since CAS Latency is not purely analog - data and strobe output are synchronized by the DLL - all possible intermediate frequencies may not be guaranteed. An application should use the next smaller JEDEC standard tCK(avg) value (2.5, 1.875, 1.5, or 1.25 ns) when calculating CL [nCK] = tAA [ns] / tCK(avg) [ns], rounding up to the next "Supported CL".
3. tCK(avg) Max limits: Calculate tCK(avg) = tAA Max / CL Selected and round the resulting tCK(avg) down to the next valid speed bin (i.e. 3.3ns or 2.5ns or 1.875 ns or 1.25 ns). This result is tCK(avg) Max corresponding to CL selected.
4. "Reserved" settings are not allowed. User must program a different value.
5. Any DDR3-1066 speed bin also supports functional operation at lower frequencies as shown in the table which are not subject to production tests but verified by design/characterization.
6. Any DDR3-1333 speed bin also supports functional operation at lower frequencies as shown in the table which are not subject to production tests but verified by design/characterization.
7. Any DDR3-1600 speed bin also supports functional operation at lower frequencies as shown in the table which are not subject to production tests but verified by design/characterization.
8. Any DDR3-1866 speed bin also supports functional operation at lower frequencies as shown in the table which are not subject to production tests but verified by design/characterization.
9. tREFI depends on operating case temperature (Tc).
10. For devices supporting optional downshift to CL=7 and CL=9, tAA/tRCD/tRP min must be 13.125 ns or lower. SPD settings must be programmed to match. For example, DDR3-1333(CL9) devices supporting downshift to DDR3-1066(CL7) should program 13.125 ns in SPD bytes for tAAmin (Byte 16), tRCDmin (Byte 18), and tRPmin (Byte 20). DDR3-1600(CL11) devices supporting downshift to DDR3-1333(CL9) or DDR3-1066(CL7) should program 13.125 ns in SPD bytes for tAAmin (Byte16), tRCDmin (Byte 18), and tRPmin (Byte 20). DDR3-1866(CL13) devices supporting downshift to DDR3-1600(CL11) or DDR3-1333(CL9) or DDR3-1066(CL7) should program 13.125 ns in SPD bytes for tAAmin (Byte16), tRCDmin (Byte 18), and tRPmin (Byte 20). DDR3-1600 devices supporting down binning to DDR3-1333 or DDR3-1066 should program 13.125ns in SPD byte for tAAmin (Byte 16), tRCDmin (Byte 18) and tRPmin (Byte 20). Once tRP (Byte 20) is programmed to 13.125ns, tRCmin (Byte 21,23) also should be programmed accordingly. For example, 49.125ns, (tRASmin + tRPmin = 36ns + 13.125ns) for DDR3-1333 and 48.125ns (tRASmin + tRPmin = 35ns + 13.125ns) for DDR3-1600.
11. For devices supporting optional down binning to CL=11, CL=9 and CL=7, tAA/tRCD/tRPmin must be 13.125ns. SPD setting must be programed to match. For example, DDR3-1866 devices supporting down binning to DDR3-1600 or DDR3-1333 or 1066 should program 13.125ns in SPD bytes for tAAmin(byte16), tRCDmin(Byte18) and tRP-min (byte20). Once tRP (Byte20) is programmed to 13.125ns, tRCmin (Byte21,23) also should be programmed accordingly. For example, 47.125ns (tRASmin + tRPmin = 34ns + 13.125ns)

AC Characteristics

Parameter	Symbol	- G6 (DDR3-800)		- H7 (DDR3-1066)		Unit	Note
		Min	Max	Min	Max		
Average clock cycle time	t_{CK}(avg)	Please refer Speed Bins				ps	
Minimum clock cycle time (DLL-off mode)	t_{CK} (DLL-off)	8	-	8	-	ns	6
Average CK high level width	t_{CH}(avg)	0.47	0.53	0.47	0.53	t_{CK}(avg)	
Average CK low level width	t_{CL}(avg)	0.47	0.53	0.47	0.53	t_{CK}(avg)	
Active Bank A to Active Bank B command period	t_{RRD}	10	-	7.5	-	ns	
		4	-	4	-	nCK	
Four activate window	t_{FAW}	40	-	37.5	-	ns	
Address and Control input hold time (VIH/VIL (DC100) levels)	1.35V						
	t_{IH}(base) DC90	285	-	210	-	ps	16
	1.5V						
	t_{IH}(base) DC100	275	-	200	-	ps	16
Address and Control input setup time (VIH/VIL (AC) levels)	1.35V						
	t_{IS}(base) AC160	215	-	140	-	ps	16
	1.5V						
	t_{IS}(base) AC175	200	-	125	-	ps	16
Address and Control input setup time (VIH/VIL (AC) levels)	1.35V						
	t_{IS}(base) AC135	365	-	290	-	ps	16,24
	1.5V						
	t_{IS}(base) AC150	350	-	275	-	ps	16,24
DQ and DM input hold time (VIH/VIL (DC) levels)	1.35V						
	t_{DH}(base) DC90	160	-	110	-	ps	17
	1.5V						
	t_{DH}(base) DC100	150	-	100	-	ps	17
DQ and DM input setup time (VIH/VIL (AC) levels)	1.35V						
	t_{DS}(base) AC160	90	-	40	-	ps	17
	1.5V						
	t_{DS}(base) AC175	75	-	25	-	ps	17

Parameter	Symbol	- G6 (DDR3-800)		- H7 (DDR3-1066)		Unit	Note
		Min	Max	Min	Max		
DQ and DM input setup time (VIH/VIL (AC) levels)	1.35						
	t_{DS}(base) AC135	140	-	90	-	ps	17
	1.5V						
	t_{DS}(base) AC150	125	-	75	-	ps	17
Control and Address Input pulse width for each input	t_{IPW}	900	-	780	-	ps	25
DQ and DM Input pulse width for each input	t_{DIPW}	600	-	490	-	ps	25
DQ high impedance time	t_{HZ}(DQ)	-	400	-	300	ps	13,14
DQ low impedance time	t_{LZ}(DQ)	-800	400	-600	300	ps	13,14
DQS, $\overline{DQS}$ high impedance time (RL + BL/2 reference)	t_{HZ}(DQS)	-	400	-	300	ps	13,14
DQS, $\overline{DQS}$ low impedance time (RL - 1 reference)	t_{LZ}(DQS)	-800	400	-600	300	ps	13,14
DQS, $\overline{DQS}$ to DQ Skew, per group, per access	t_{DQSQ}	-	200	-	150	ps	12,13
$\overline{CAS}$ to $\overline{CAS}$ command delay	t_{CCD}	4	-	4	-	nCK	
DQ output hold time from DQS, $\overline{DQS}$	t_{QH}	0.38	-	0.38	-	t_{CK}(avg)	12,13
DQS, $\overline{DQS}$ rising edge output access time from rising CK, $\overline{CK}$	t_{DQSCK}	-400	400	-300	300	ps	12,13
DQS latching rising transitions to associated clock edges	t_{DQSS}	-0.25	0.25	-0.25	0.25	t_{CK}(avg)	
DQS falling edge hold time from rising CK	t_{DSH}	0.2	-	0.2	-	t_{CK}(avg)	29
DQS falling edge setup time to rising CK	t_{DSS}	0.2	-	0.2	-	t_{CK}(avg)	29
DQS input high pulse width	t_{DQSH}	0.45	0.55	0.45	0.55	t_{CK}(avg)	27,28
DQS input low pulse width	t_{DQSL}	0.45	0.55	0.45	0.55	t_{CK}(avg)	26,28
DQS output high time	t_{QSH}	0.38	-	0.38	-	t_{CK}(avg)	12,13
DQS output low time	t_{QSL}	0.38	-	0.38	-	t_{CK}(avg)	12,13
Mode register set command cycle time	t_{MRD}	4	-	4	-	nCK	
Mode register set command update delay	t_{MOD}	15	-	15	-	ns	
		12	-	12	-	nCK	
Read preamble time	t_{RPRE}	0.9	-	0.9	-	t_{CK}(avg)	13,19
Read postamble time	t_{RPST}	0.3	-	0.3	-	t_{CK}(avg)	11,13
Write preamble time	t_{WPRE}	0.9	-	0.9	-	t_{CK}(avg)	1
Write postamble time	t_{WPST}	0.3	-	0.3	-	t_{CK}(avg)	1
Write recovery time	t_{WR}	15	-	15	-	ns	
Auto precharge write recovery + Precharge time	t_{DAL}(min)	WR + roundup [tRP / tCK(avg)]				nCK	

Parameter	Symbol	- G6 (DDR3-800)		- H7 (DDR3-1066)		Unit	Note
		Min	Max	Min	Max		
Multi-purpose register recovery time	t_{MPRR}	1	-	1	-	nCK	22
Internal write to read command delay	t_{WTR}	7.5	-	7.5	-	ns	18
		4	-	4	-	nCK	18
Internal read to precharge command delay	t_{RTP}	7.5	-	7.5	-	ns	
		4	-	4	-	nCK	
Minimum CKE low width for Self-refresh entry to exit timing	t_{CKESR}	t_{CKE}(min) +1nCK	-	t_{CKE}(min) +1nCK	-		
Valid clock requirement after Self-refresh entry or Power-down entry	t_{CKSRE}	10	-	10	-	ns	
		5	-	5	-	nCK	
Valid clock requirement before Self-refresh exit or Power-down exit	t_{CKSRX}	10	-	10	-	ns	
		5	-	5	-	nCK	
Exit Self-refresh to commands not requiring a locked DLL	t_{XS}	t_{RFC}(min) +10	-	t_{RFC}(min) +10	-	ns	
		5	-	5	-	nCK	
Exit Self-refresh to commands requiring a locked DLL	t_{XSDLL}	t_{DLLK} (min)	-	t_{DLLK} (min)	-	nCK	
Auto-refresh to Active/Auto-refresh command time	t_{RFC}	260	-	260	-	ns	
Average Periodic Refresh Interval 0°C ≤ Tc ≤ +85°C	t_{REFI}	-	7.8	-	7.8	µs	
Average Periodic Refresh Interval +85°C < Tc ≤ +95°C	t_{REFI}	-	3.9	-	3.9	µs	
CKE minimum high and low pulse width	t_{CKE}	7.5	-	5.625	-	ns	
		3	-	3	-	nCK	
Exit reset from CKE high to a valid command	t_{XPR}	t_{RFC}(min) +10	-	t_{RFC}(min) +10	-	ns	
		5	-	5	-	nCK	
DLL locking time	t_{DLLK}	512	-	512	-	nCK	
Power-down entry to exit time	t_{PD}	t_{CKE}(min)	9*t_{REFI}	t_{CKE}(min)	9*t_{REFI}		15
Exit precharge power-down with DLL frozen to commands requiring a locked DLL	t_{XPDLL}	24	-	24	-	ns	2
		10	-	10	-	nCK	2
Exit power-down with DLL on to any valid command; Exit precharge power-down with DLL frozen to commands not requiring a locked DLL	t_{XP}	7.5	-	7.5	-	ns	
		3	-	3	-	nCK	
Command pass disable delay	t_{CPDED}	1	-	1	-	nCK	
Timing of ACT command to Power-down entry	$t_{ACTPDEN}$	1	-	1	-	nCK	20
Timing of PRE command to Power-down entry	t_{PRPDEN}	1	-	1	-	nCK	20
Timing of RD/RDA command to Power-down entry	t_{RDPDEN}	RL+4+1	-	RL+4+1	-	nCK	

Parameter	Symbol	- G6 (DDR3-800)		- H7 (DDR3-1066)		Unit	Note
		Min	Max	Min	Max		
Timing of WR command to Power-down entry (BL8OTF, BL8MRS, BL4OTF)	t_{WRPDEN} (min)	WL + 4 + [tWR/tCK(avg)]				nCK	9
Timing of WR command to Power-down entry (BC4MRS)	t_{WRPDEN} (min)	WL + 2 + [tWR/tCK(avg)]				nCK	9
Timing of WRA command to Power-down entry (BL8OTF, BL8MRS, BL4OTF)	$t_{WRAPDEN}$	WL+4 +WR+1	-	WL+4 +WR+1	-	nCK	10
Timing of WRA command to Power-down entry (BC4MRS)	$t_{WRAPDEN}$	WL+2 +WR+1	-	WL+2 +WR+1	-	nCK	10
Timing of REF command to Power-down entry	$t_{REFPDEN}$	1	-	1	-	nCK	20,21
Timing of MRS command to Power-down entry	$t_{MRSPDEN}$	t_{MOD} (min)	-	t_{MOD} (min)	-		
RTT turn-on	t_{AON}	-400	400	-300	300	ps	7
Asynchronous RTT turn-on delay (Power-down with DLL frozen)	t_{AONPD}	2	8.5	2	8.5	ns	
RTT_Nom and RTT_WR turn-off time from ODTLoff reference	t_{AOF}	0.3	0.7	0.3	0.7	t_{CK}(avg)	8
Asynchronous RTT turn-off delay (Power-down with DLL frozen)	t_{AOFPD}	2	8.5	2	8.5	ns	
ODT high time without write command or with write command and BC4	ODTH4	4	-	4	-	nCK	
ODT high time with Write command and BL8	ODTH8	6	-	6	-	nCK	
RTT dynamic change skew	t_{ADC}	0.3	0.7	0.3	0.7	t_{CK}(avg)	
Power-up and reset calibration time	t_{ZQinit}	512	-	512	-	nCK	
Normal operation full calibration time	t_{ZQoper}	256	-	256	-	nCK	
Normal operation short calibration time	t_{ZQCS}	64	-	64	-	nCK	23
First DQS pulse rising edge after write leveling mode is programmed	t_{WLMRD}	40	-	40	-	nCK	3
DQS, $\overline{DQS}$ delay after write leveling mode is pro-grammed	$t_{WLDQSEN}$	25	-	25	-	nCK	3
Write leveling setup time from rising CK, $\overline{CK}$ crossing to rising DQS, $\overline{DQS}$ crossing	t_{WLS}	325	-	245	-	ps	
Write leveling hold time from rising DQS, $\overline{DQS}$ crossing to rising CK, $\overline{CK}$ crossing	t_{WLH}	325	-	245	-	ps	
Write leveling output delay	t_{WLO}	0	9	0	9	ns	
Write leveling output error	t_{WLOE}	0	2	0	2	ns	
Absolute clock period	t_{CK}(abs)	tCK(avg)min + tJIT(per)min	tCK(avg)max + tJIT(per)max	tCK(avg)min + tJIT(per)min	tCK(avg)max + tJIT(per)max	ps	
Absolute clock high pulse width	t_{CH}(abs)	0.43	-	0.43	-	t_{CK}(avg)	30
Absolute clock low pulse width	t_{CL}(abs)	0.43	-	0.43	-	t_{CK}(avg)	31
Clock period jitter	t_{JIT}(per)	-100	100	-90	90	ps	

Parameter	Symbol	- G6 (DDR3-800)		- H7 (DDR3-1066)		Unit	Note
		Min	Max	Min	Max		
Clock period jitter during DLL locking period	t_{JIT}(per,lck)	-90	90	-80	80	ps	
Cycle to cycle period jitter	t_{JIT}(cc)	-	200	-	180	ps	
Cycle to cycle period jitter during DLL locking period	t_{JIT}(cc,lck)	-	180	-	160	ps	
Cumulative error across 2 cycles	t_{ERR}(2per)	-147	147	-132	132	ps	
Cumulative error across 3 cycles	t_{ERR}(3per)	-175	175	-157	157	ps	
Cumulative error across 4 cycles	t_{ERR}(4per)	-194	194	-175	175	ps	
Cumulative error across 5 cycles	t_{ERR}(5per)	-209	209	-188	188	ps	
Cumulative error across 6 cycles	t_{ERR}(6per)	-222	222	-200	200	ps	
Cumulative error across 7 cycles	t_{ERR}(7per)	-232	232	-209	209	ps	
Cumulative error across 8 cycles	t_{ERR}(8per)	-241	241	-217	217	ps	
Cumulative error across 9 cycles	t_{ERR}(9per)	-249	249	-224	224	ps	
Cumulative error across 10 cycles	t_{ERR}(10per)	-257	257	-231	231	ps	
Cumulative error across 11 cycles	t_{ERR}(11per)	-263	263	-237	237	ps	
Cumulative error across 12 cycles	t_{ERR}(12per)	-269	269	-242	242	ps	
Cumulative error across n = 13,14,...49,50 cycles	t_{ERR}(nper)	t_{ERR}(nper)min = (1 + 0.68ln(n))*t_{JIT}(per)min t_{ERR}(nper)max = (1 + 0.68ln(n))*t_{JIT}(per)max				ps	32

Parameter	Symbol	- I9 (DDR3-1333)		- J11 (DDR3-1600)		Unit	Note
		Min	Max	Min	Max		
Average clock cycle time	t_{CK}(avg)	Please refer Speed Bins				ps	
Minimum clock cycle time (DLL-off mode)	t_{CK} (DLL-off)	8	-	8	-	ns	6
Average CK high level width	t_{CH}(avg)	0.47	0.53	0.47	0.53	t_{CK}(avg)	
Average CK low level width	t_{CL}(avg)	0.47	0.53	0.47	0.53	t_{CK}(avg)	
Active Bank A to Active Bank B command period	t_{RRD}	6	-	6	-	ns	
		4	-	4	-	nCK	
Four activate window	t_{FAW}	30	-	30	-	ns	
Address and Control input hold time (VIH/VIL (DC) levels)	1.35V						
	t_{IH}(base) DC90	150	-	130	-	ps	16
	1.5V						
	t_{IH}(base) DC100	140	-	120	-	ps	16
Address and Control input setup time (VIH/VIL (AC) levels)	1.35V						
	t_{IS}(base) AC160	80	-	60	-	ps	16
	1.5V						
	t_{IS}(base) AC175	65	-	45	-	ps	16
Address and Control input setup time (VIH/VIL (AC) levels)	1.35V						
	t_{IS}(base) AC135	205	-	185	-	ps	16
	1.5V						
	t_{IS}(base) AC150	190	-	170	-	ps	16,24
DQ and DM input hold time (VIH/VIL (DC) levels)	1.35V						
	t_{DH}(base) DC90	75	-	55	-	ps	17
	1.5V						
	t_{DH}(base) DC100	65	-	45	-	ps	17
DQ and DM input setup time (VIH/VIL (AC) levels)	1.35V						
	t_{DS}(base) AC160	-	-	-	-	ps	17
	1.5V						
	t_{DS}(base) AC175	-	-	-	-	ps	17

Parameter	Symbol	- I9 (DDR3-1333)		- J11 (DDR3-1600)		Unit	Note
		Min	Max	Min	Max		
DQ and DM input setup time (VIH/VIL (AC) levels)	1.35V						
	t_{DS}(base) AC135	45	-	25	-	ps	17
	1.5V						
	t_{DS}(base) AC150	30	-	10	-	ps	17
Control and Address Input pulse width for each input	t_{IPW}	620	-	560	-	ps	25
DQ and DM Input pulse width for each input	t_{DIPW}	400	-	360	-	ps	25
DQ high impedance time	t_{HZ}(DQ)	-	250	-	225	ps	13,14
DQ low impedance time	t_{LZ}(DQ)	-500	250	-450	225	ps	13,14
DQS, $\overline{DQS}$ high impedance time (RL + BL/2 reference)	t_{HZ}(DQS)	-	250	-	225	ps	13,14
DQS, $\overline{DQS}$ low impedance time (RL - 1 reference)	t_{LZ}(DQS)	-500	250	-450	225	ps	13,14
DQS, $\overline{DQS}$ to DQ Skew, per group, per access	t_{DQSQ}	-	125	-	100	ps	12,13
$\overline{CAS}$ to $\overline{CAS}$ command delay	t_{CCD}	4	-	4	-	nCK	
DQ output hold time from DQS, $\overline{DQS}$	t_{QH}	0.38	-	0.38	-	t_{CK}(avg)	12,13
DQS, $\overline{DQS}$ rising edge output access time from rising CK, $\overline{CK}$	t_{DQSCK}	-255	255	-225	225	ps	12,13
DQS latching rising transitions to associated clock edges	t_{DQSS}	-0.25	0.25	-0.27	0.27	t_{CK}(avg)	
DQS falling edge hold time from rising CK	t_{DSH}	0.2	-	0.18	-	t_{CK}(avg)	29
DQS falling edge setup time to rising CK	t_{DSS}	0.2	-	0.18	-	t_{CK}(avg)	29
DQS input high pulse width	t_{DQSH}	0.45	0.55	0.45	0.55	t_{CK}(avg)	27,28
DQS input low pulse width	t_{DQSL}	0.45	0.55	0.45	0.55	t_{CK}(avg)	26,28
DQS output high time	t_{QSH}	0.40	-	0.40	-	t_{CK}(avg)	12,13
DQS output low time	t_{QSL}	0.40	-	0.40	-	t_{CK}(avg)	12,13
Mode register set command cycle time	t_{MRD}	4	-	4	-	nCK	
Mode register set command update delay	t_{MOD}	15	-	15	-	ns	
		12	-	12	-	nCK	
Read preamble time	t_{RPRE}	0.9	-	0.9	-	t_{CK}(avg)	13,19
Read postamble time	t_{RPST}	0.3	-	0.3	-	t_{CK}(avg)	11,13
Write preamble time	t_{WPRE}	0.9	-	0.9	-	t_{CK}(avg)	1
Write postamble time	t_{WPST}	0.3	-	0.3	-	t_{CK}(avg)	1
Write recovery time	t_{WR}	15	-	15	-	ns	
Auto precharge write recovery + Precharge time	t_{DAL}(min)	WR + roundup [tRP / tCK(avg)]				nCK	

Parameter	Symbol	- I9 (DDR3-1333)		- J11 (DDR3-1600)		Unit	Note
		Min	Max	Min	Max		
Multi-purpose register recovery time	t_{MPRR}	1	-	1	-	nCK	22
Internal write to read command delay	t_{WTR}	7.5	-	7.5	-	ns	18
		4	-	4	-	nCK	18
Internal read to precharge command delay	t_{RTP}	7.5	-	7.5	-	ns	
		4	-	4	-	nCK	
Minimum CKE low width for Self-refresh entry to exit timing	t_{CKESR}	t_{CKE}(min) +1nCK	-	t_{CKE}(min) +1nCK	-		
Valid clock requirement after Self-refresh entry or Power-down entry	t_{CKSRE}	10	-	10	-	ns	
		5	-	5	-	nCK	
Valid clock requirement before Self-refresh exit or Power-down exit	t_{CKSRX}	10	-	10	-	ns	
		5	-	5	-	nCK	
Exit Self-refresh to commands not requiring a locked DLL	t_{XS}	t_{RFC}(min) +10	-	t_{RFC}(min) +10	-	ns	
		5	-	5	-	nCK	
Exit Self-refresh to commands requiring a locked DLL	t_{XSDLL}	t_{DLLK} (min)	-	t_{DLLK} (min)	-	nCK	
Auto-refresh to Active/Auto-refresh command time	t_{RFC}	260	-	260	-	ns	
Average Periodic Refresh Interval 0°C ≤ Tc ≤ +85°C	t_{REFI}	-	7.8	-	7.8	µs	
Average Periodic Refresh Interval +85°C < Tc ≤ +95°C	t_{REFI}	-	3.9	-	3.9	µs	
CKE minimum high and low pulse width	t_{CKE}	5.625	-	5	-	ns	
		3	-	3	-	nCK	
Exit reset from CKE high to a valid command	t_{XPR}	t_{RFC}(min) +10	-	t_{RFC}(min) +10	-	ns	
		5	-	5	-	nCK	
DLL locking time	t_{DLLK}	512	-	512	-	nCK	
Power-down entry to exit time	t_{PD}	t_{CKE}(min)	9*t_{REFI}	t_{CKE}(min)	9*t_{REFI}		15
Exit precharge power-down with DLL frozen to commands requiring a locked DLL	t_{XPDLL}	24	-	24	-	ns	2
		10	-	10	-	nCK	2
Exit power-down with DLL on to any valid command; Exit precharge power-down with DLL frozen to commands not requiring a locked DLL	t_{XP}	6	-	6	-	ns	
		3	-	3	-	nCK	
Command pass disable delay	t_{CPDED}	1	-	1	-	nCK	
Timing of ACT command to Power-down entry	$t_{ACTPDEN}$	1	-	1	-	nCK	20
Timing of PRE command to Power-down entry	t_{PRPDEN}	1	-	1	-	nCK	20
Timing of RD/RDA command to Power-down entry	t_{RDPDEN}	RL+4+1	-	RL+4+1	-	nCK	

Parameter	Symbol	- I9 (DDR3-1333)		- J11 (DDR3-1600)		Unit	Note
		Min	Max	Min	Max		
Timing of WR command to Power-down entry (BL8OTF, BL8MRS, BL4OTF)	t_{WRPDEN} (min)	WL + 4 + [tWR/tCK(avg)]				nCK	9
Timing of WR command to Power-down entry (BC4MRS)	t_{WRPDEN} (min)	WL + 2 + [tWR/tCK(avg)]				nCK	9
Timing of WRA command to Power-down entry (BL8OTF, BL8MRS, BL4OTF)	$t_{WRAPDEN}$	WL+4 +WR+1	-	WL+4 +WR+1	-	nCK	10
Timing of WRA command to Power-down entry (BC4MRS)	$t_{WRAPDEN}$	WL+2 +WR+1	-	WL+2 +WR+1	-	nCK	10
Timing of REF command to Power-down entry	$t_{REFPDEN}$	1	-	1	-	nCK	20,21
Timing of MRS command to Power-down entry	$t_{MRSPDEN}$	t_{MOD} (min)	-	t_{MOD} (min)	-		
RTT turn-on	t_{AON}	-250	250	-225	225	ps	7
Asynchronous RTT turn-on delay (Power-down with DLL frozen)	t_{AONPD}	2	8.5	2	8.5	ns	
RTT_Nom and RTT_WR turn-off time from ODTLoff reference	t_{AOF}	0.3	0.7	0.3	0.7	t_{CK}(avg)	8
Asynchronous RTT turn-off delay (Power-down with DLL frozen)	t_{AOFPD}	2	8.5	2	8.5	ns	
ODT high time without write command or with write command and BC4	ODTH4	4	-	4	-	nCK	
ODT high time with Write command and BL8	ODTH8	6	-	6	-	nCK	
RTT dynamic change skew	t_{ADC}	0.3	0.7	0.3	0.7	t_{CK}(avg)	
Power-up and reset calibration time	t_{ZQinit}	512	-	512	-	nCK	
Normal operation full calibration time	t_{ZQoper}	256	-	256	-	nCK	
Normal operation short calibration time	t_{ZQCS}	64	-	64	-	nCK	23
First DQS pulse rising edge after write leveling mode is programmed	t_{WLMRD}	40	-	40	-	nCK	3
DQS, $\overline{DQS}$ delay after write leveling mode is pro-grammed	$t_{WLDQSEN}$	25	-	25	-	nCK	3
Write leveling setup time from rising CK, $\overline{CK}$ crossing to rising DQS, $\overline{DQS}$ crossing	t_{WLS}	195	-	165	-	ps	
Write leveling hold time from rising DQS, $\overline{DQS}$ crossing to rising CK, $\overline{CK}$ crossing	t_{WLH}	195	-	165	-	ps	
Write leveling output delay	t_{WLO}	0	9	0	7.5	ns	
Write leveling output error	t_{WLOE}	0	2	0	2	ns	
Absolute clock period	t_{CK}(abs)	tCK(avg)min + tJIT(per)min	tCK(avg)max + tJIT(per)max	tCK(avg)min + tJIT(per)min	tCK(avg)max + tJIT(per)max	ps	
Absolute clock high pulse width	t_{CH}(abs)	0.43	-	0.43	-	t_{CK}(avg)	30
Absolute clock low pulse width	t_{CL}(abs)	0.43	-	0.43	-	t_{CK}(avg)	31
Clock period jitter	t_{JIT}(per)	-80	80	-70	70	ps	
Clock period jitter during DLL locking period	t_{JIT}(per,lck)	-70	70	-60	60	ps	

Parameter	Symbol	- I9 (DDR3-1333)		- J11 (DDR3-1600)		Unit	Note
		Min	Max	Min	Max		
Cycle to cycle period jitter	t_{JIT}(cc)	-	160	-	140	ps	
Cycle to cycle period jitter during DLL locking period	t_{JIT}(cc,lck)	-	140	-	120	ps	
Cumulative error across 2 cycles	t_{ERR}(2per)	-118	118	-103	103	ps	
Cumulative error across 3 cycles	t_{ERR}(3per)	-140	140	-122	122	ps	
Cumulative error across 4 cycles	t_{ERR}(4per)	-155	155	-136	136	ps	
Cumulative error across 5 cycles	t_{ERR}(5per)	-168	168	-147	147	ps	
Cumulative error across 6 cycles	t_{ERR}(6per)	-177	177	-155	155	ps	
Cumulative error across 7 cycles	t_{ERR}(7per)	-186	186	-163	163	ps	
Cumulative error across 8 cycles	t_{ERR}(8per)	-193	193	-169	169	ps	
Cumulative error across 9 cycles	t_{ERR}(9per)	-200	200	-175	175	ps	
Cumulative error across 10 cycles	t_{ERR}(10per)	-205	205	-180	180	ps	
Cumulative error across 11 cycles	t_{ERR}(11per)	-210	210	-184	184	ps	
Cumulative error across 12 cycles	t_{ERR}(12per)	-215	215	-188	188	ps	
Cumulative error across n = 13,14,...49,50 cycles	t_{ERR}(nper)	t_{ERR}(nper)min = (1 + 0.68ln(n))*t_{JIT}(per)min t_{ERR}(nper)max = (1 + 0.68ln(n))*t_{JIT}(per)max				ps	32

Parameter	Symbol	- K13 (DDR3-1866)				Unit	Note
		Min	Max				
Average clock cycle time	t_{CK}(avg)	Please refer Speed Bins				ps	
Minimum clock cycle time (DLL-off mode)	t_{CK} (DLL-off)	8	-			ns	6
Average CK high level width	t_{CH}(avg)	0.47	0.53			t_{CK}(avg)	
Average CK low level width	t_{CL}(avg)	0.47	0.53			t_{CK}(avg)	
Active Bank A to Active Bank B command period	t_{RRD}	5	-			ns	
		4	-			nCK	
Four activate window	t_{FAW}	27	-			ns	
Address and Control input hold time (VIH/VIL (DC) levels)	1.35V						
	t_{IH}(base) DC90	110	-			ps	16
	1.5V						
	t_{IH}(base) DC100	100	-			ps	16
Address and Control input setup time (VIH/VIL (AC) levels)	1.35V						
	t_{IS}(base) AC125	150	-			ps	16
	1.5V						
	t_{IS}(base) AC125	150	-			ps	16
Address and Control input setup time (VIH/VIL (AC) levels)	1.35V						
	t_{IS}(base) AC135	65	-			ps	16
	1.5V						
	t_{IS}(base) AC150	65	-			ps	16,24
DQ and DM input hold time (VIH/VIL (DC) levels)	1.35V						
	t_{DH}(base) DC90	75	-			ps	17
	1.5V						
	t_{DH}(base) DC100	70	-			ps	17
DQ and DM input setup time (VIH/VIL (AC) levels)	1.35V						
	t_{DS}(base) AC130	70	-			ps	17
	1.5V						
	t_{DS}(base) AC135	68	-			ps	17
Control and Address Input pulse width for each input	t_{IPW}	535	-			ps	25

Parameter	Symbol	- K13 (DDR3-1866)				Unit	Note
		Min	Max				
DQ and DM Input pulse width for each input	t_{DIPW}	320	-			ps	25
DQ high impedance time	t_{HZ}(DQ)	-	195			ps	13,14
DQ low impedance time	t_{LZ}(DQ)	--390	195			ps	13,14
DQS, $\overline{DQS}$ high impedance time (RL + BL/2 reference)	t_{HZ}(DQS)	-	195			ps	13,14
DQS, $\overline{DQS}$ low impedance time (RL - 1 reference)	t_{LZ}(DQS)	-390	195			ps	13,14
DQS, $\overline{DQS}$ to DQ Skew, per group, per access	t_{DQSQ}	-	85			ps	12,13
$\overline{CAS}$ to $\overline{CAS}$ command delay	t_{CCD}	4	-			nCK	
DQ output hold time from DQS, $\overline{DQS}$	t_{QH}	0.38	-			t_{CK}(avg)	12,13
DQS, $\overline{DQS}$ rising edge output access time from rising CK, $\overline{CK}$	t_{DQSCK}	-195	195			ps	12,13
DQS latching rising transitions to associated clock edges	t_{DQSS}	-0.27	0.27			t_{CK}(avg)	
DQS falling edge hold time from rising CK	t_{DSH}	0.18	-			t_{CK}(avg)	29
DQS falling edge setup time to rising CK	t_{DSS}	0.18	-			t_{CK}(avg)	29
DQS input high pulse width	t_{DQSH}	0.45	0.55			t_{CK}(avg)	27,28
DQS input low pulse width	t_{DQSL}	0.45	0.55			t_{CK}(avg)	26,28
DQS output high time	t_{QSH}	0.40	-			t_{CK}(avg)	12,13
DQS output low time	t_{QSL}	0.40	-			t_{CK}(avg)	12,13
Mode register set command cycle time	t_{MRD}	4	-			nCK	
Mode register set command update delay	t_{MOD}	15	-			ns	
		12	-			nCK	
Read preamble time	t_{RPRE}	0.9	-			t_{CK}(avg)	13,19
Read postamble time	t_{RPST}	0.3	-			t_{CK}(avg)	11,13
Write preamble time	t_{WPRE}	0.9	-			t_{CK}(avg)	1
Write postamble time	t_{WPST}	0.3	-			t_{CK}(avg)	1
Write recovery time	t_{WR}	15	-			ns	
Auto precharge write recovery + Precharge time	t_{DAL}(min)	WR + roundup [tRP / tCK(avg)]				nCK	
Multi-purpose register recovery time	t_{MPRR}	1	-			nCK	22
Internal write to read command delay	t_{WTR}	7.5	-			ns	18
		4	-			nCK	18
Internal read to precharge command delay	t_{RTP}	7.5	-			ns	
		4	-			nCK	

Parameter	Symbol	- K13 (DDR3-1866) Min	Max			Unit	Note
Minimum CKE low width for Self-refresh entry to exit timing	t_{CKESR}	t_{CKE}(min) +1nCK	-				
Valid clock requirement after Self-refresh entry or Power-down entry	t_{CKSRE}	10	-			ns	
		5	-			nCK	
Valid clock requirement before Self-refresh exit or Power-down exit	t_{CKSRX}	10	-			ns	
		5	-			nCK	
Exit Self-refresh to commands not requiring a locked DLL	t_{XS}	t_{RFC}(min) +10	-			ns	
		5	-			nCK	
Exit Self-refresh to commands requiring a locked DLL	t_{XSDLL}	t_{DLLK} (min)	-			nCK	
Auto-refresh to Active/Auto-refresh command time	t_{RFC}	260	-			ns	
Average Periodic Refresh Interval 0°C ≤ Tc ≤ +85°C	t_{REFI}	-	7.8			µs	
Average Periodic Refresh Interval +85°C < Tc ≤ +95°C	t_{REFI}	-	3.9			µs	
CKE minimum high and low pulse width	t_{CKE}	5	-			ns	
		3	-			nCK	
Exit reset from CKE high to a valid command	t_{XPR}	t_{RFC}(min) +10	-			ns	
		5	-			nCK	
DLL locking time	t_{DLLK}	512	-			nCK	
Power-down entry to exit time	t_{PD}	t_{CKE}(min)	9*t_{REFI}				15
Exit precharge power-down with DLL frozen to commands requiring a locked DLL	t_{XPDLL}	24	-			ns	2
		10	-			nCK	2
Exit power-down with DLL on to any valid command; Exit precharge power-down with DLL frozen to commands not requiring a locked DLL	t_{XP}	6	-			ns	
		3	-			nCK	
Command pass disable delay	t_{CPDED}	2	-			nCK	
Timing of ACT command to Power-down entry	$t_{ACTPDEN}$	1	-			nCK	20
Timing of PRE command to Power-down entry	t_{PRPDEN}	1	-			nCK	20
Timing of RD/RDA command to Power-down entry	t_{RDPDEN}	RL+4+1	-			nCK	
Timing of WR command to Power-down entry (BL8OTF, BL8MRS, BL4OTF)	t_{WRPDEN} (min)	WL + 4 + [tWR/tCK(avg)]				nCK	9
Timing of WR command to Power-down entry (BC4MRS)	t_{WRPDEN} (min)	WL + 2 + [tWR/tCK(avg)]				nCK	9
Timing of WRA command to Power-down entry (BL8OTF, BL8MRS, BL4OTF)	$t_{WRAPDEN}$	WL+4 +WR+1	-			nCK	10

Parameter	Symbol	- K13 (DDR3-1866)				Unit	Note
		Min	Max				
Timing of WRA command to Power-down entry (BC4MRS)	$t_{WRAPDEN}$	WL+2 +WR+1	-			nCK	10
Timing of REF command to Power-down entry	$t_{REFPDEN}$	1	-			nCK	20,21
Timing of MRS command to Power-down entry	$t_{MRSPDEN}$	t_{MOD} (min)	-				
RTT turn-on	t_{AON}	-195	195			ps	7
Asynchronous RTT turn-on delay (Power-down with DLL frozen)	t_{AONPD}	2	8.5			ns	
RTT_Nom and RTT_WR turn-off time from ODTLoff reference	t_{AOF}	0.3	0.7			t_{CK}(avg)	8
Asynchronous RTT turn-off delay (Power-down with DLL frozen)	t_{AOFPD}	2	8.5			ns	
ODT high time without write command or with write command and BC4	ODTH4	4	-			nCK	
ODT high time with Write command and BL8	ODTH8	6	-			nCK	
RTT dynamic change skew	t_{ADC}	0.3	0.7			t_{CK}(avg)	
Power-up and reset calibration time	t_{ZQinit}	512	-			nCK	
Normal operation full calibration time	t_{ZQoper}	256	-			nCK	
Normal operation short calibration time	t_{ZQCS}	64	-			nCK	23
First DQS pulse rising edge after write leveling mode is programmed	t_{WLMRD}	40	-			nCK	3
DQS, $\overline{DQS}$ delay after write leveling mode is pro-grammed	$t_{WLDQSEN}$	25	-			nCK	3
Write leveling setup time from rising CK, $\overline{CK}$ crossing to rising DQS, $\overline{DQS}$ crossing	t_{WLS}	140	-			ps	
Write leveling hold time from rising DQS, $\overline{DQS}$ crossing to rising CK, $\overline{CK}$ crossing	t_{WLH}	140	-			ps	
Write leveling output delay	t_{WLO}	0	7.5			ns	
Write leveling output error	t_{WLOE}	0	2			ns	
Absolute clock period	t_{CK}(abs)	tCK(avg)min + tJIT(per)min	tCK(avg)max + tJIT(per)max			ps	
Absolute clock high pulse width	t_{CH}(abs)	0.43	-			t_{CK}(avg)	30
Absolute clock low pulse width	t_{CL}(abs)	0.43	-			t_{CK}(avg)	31
Clock period jitter	t_{JIT}(per)	-60	60			ps	
Clock period jitter during DLL locking period	t_{JIT}(per,lck)	-50	50			ps	
Cycle to cycle period jitter	t_{JIT}(cc)	-	120			ps	
Cycle to cycle period jitter during DLL locking period	t_{JIT}(cc,lck)	-	100			ps	
Cumulative error across 2 cycles	t_{ERR}(2per)	-88	88			ps	
Cumulative error across 3 cycles	t_{ERR}(3per)	-105	105			ps	

Parameter	Symbol	- K13 (DDR3-1866)				Unit	Note
		Min	Max				
Cumulative error across 4 cycles	t_{ERR}(4per)	-117	117			ps	
Cumulative error across 5 cycles	t_{ERR}(5per)	-126	126			ps	
Cumulative error across 6 cycles	t_{ERR}(6per)	-133	133			ps	
Cumulative error across 7 cycles	t_{ERR}(7per)	-139	139			ps	
Cumulative error across 8 cycles	t_{ERR}(8per)	-145	145			ps	
Cumulative error across 9 cycles	t_{ERR}(9per)	-150	150			ps	
Cumulative error across 10 cycles	t_{ERR}(10per)	-154	154			ps	
Cumulative error across 11 cycles	t_{ERR}(11per)	-158	158			ps	
Cumulative error across 12 cycles	t_{ERR}(12per)	-161	161			ps	
Cumulative error across n = 13,14,...49,50 cycles	t_{ERR}(nper)	$t_{ERR}(nper)min = (1 + 0.68ln(n))*t_{JIT}(per)min$ $t_{ERR}(nper)max = (1 + 0.68ln(n))*t_{JIT}(per)max$				ps	32

Notes for AC Electrical Characteristics

NOTE :

1. Actual value dependant upon measurement level definitions which are TBD.
2. Commands requiring a locked DLL are: READ (and READA) and synchronous ODT commands.
3. The max values are system dependent.
4. WR as programmed in mode register.
5. Value must be rounded-up to next higher integer value.
6. There is no maximum cycle time limit besides the need to satisfy the refresh interval, tREFI.
7. ODT turn on time (min.) is when the device leaves high impedance and ODT resistance begins to turn on. ODT turn on time (max.) is when the ODT resistance is fully on. Both are measured from ODTLon.
8. ODT turn-off time (min.) is when the device starts to turn-off ODT resistance. ODT turn-off time (max.) is when the bus is in high impedance. Both are measured from ODTLoff.
9. tWR is defined in ns, for calculation of tWRPDEN it is necessary to round up tWR / tCK to the next integer.
10. WR in clock cycles as programmed in MR0.
11. The maximum read postamble is bound by tDQSCK(min) plus tQSH(min) on the left side and tHZ(DQS)max on the right side.
12. Output timing deratings are relative to the SDRAM input clock. When the device is operated with input clock jitter, this parameter needs to be derated by TBD.
13. Value is only valid for RON34.
14. Single ended signal parameter. Refer to the section of tLZ(DQS), tLZ(DQ), tHZ(DQS), tHZ(DQ) Notes for definition and measurement method.
15. tREFI depends on operating case temperature (Tc).
16. tIS(base) and tIH(base) values are for 1V/ns command/addresss single-ended slew rate and 2V/ns CK, $\overline{CK}$ differential slew rate, Note for DQ and DM signals, VREF(DC) = VREFDQ(DC). For input only pins except $\overline{RESET}$, VREF(DC) = VREFCA(DC). See Address / Command Setup, Hold and Derating section.
17. tDS(base) and tDH(base) values are for 1V/ns DQ single-ended slew rate and 2V/ns DQS, $\overline{DQS}$ differential slew rate. Note for DQ and DM signals,VREF(DC)= VREFDQ(DC). For input only pins except RESET, VREF(DC) = VREFCA(DC). See Data Setup, Hold and and Slew Rate Derating section.
18. Start of internal write transaction is defined as follows ;
    For BL8 (fixed by MRS and on-the-fly) : Rising clock edge 4 clock cycles after WL.
    For BC4 (on-the-fly) : Rising clock edge 4 clock cycles after WL.
    For BC4 (fixed by MRS) : Rising clock edge 2 clock cycles after WL.
19. The maximum read preamble is bound by tLZDQS(min) on the left side and tDQSCK(max) on the right side.
20. CKE is allowed to be registered low while operations such as row activation, precharge, autoprecharge or refresh are in progress, but power-down IDD spec will not be applied until finishing those operation.
21. Although CKE is allowed to be registered LOW after a REFRESH command once tREFPDEN(min) is satisfied, there are cases where additional time such as tXPDLL(min) is also required.
22. Defined between end of MPR read burst and MRS which reloads MPR or disables MPR function.
23. One ZQCS command can effectively correct a minimum of 0.5 % (ZQCorrection) of RON and RTT impedance error within 64 nCK for all speed bins assuming the maximum sensitivities specified in the “Output Driver Voltage and Temperature Sensitivity” and “ODT Voltage and Temperature Sensitivity” tables. The appropriate interval between ZQCS commands can be determined from these tables and other application specific parameters.
    One method for calculating the interval between ZQCS commands, given the temperature (Tdriftrate) and voltage (Vdriftrate) drift rates that the SDRAM is subject to in the application, is illustrated. The interval could be defined by the following formula:
    $$\frac{\text{ZQCorrection}}{(\text{TSens} \times \text{Tdriftrate}) + (\text{VSens} \times \text{Vdriftrate})}$$
    where TSens = max(dRTTdT, dRONdTM) and VSens = max(dRTTdV, dRONdVM) define the SDRAM temperature and voltage sensitivities.
24. The tIS(base) AC150 specifications are adjusted from the tIS(base) specification by adding an additional 100 ps of

derating to accommodate for the lower alternate threshold of 150 mV and another 25 ps to account for the earlier reference point [(175 mv - 150 mV) / 1 V/ns].

25. Pulse width of a input signal is defined as the width between the first crossing of VREF(DC) and the consecutive crossing of VREF(DC).
26. tDQSL describes the instantaneous differential input low pulse width on DQS - $\overline{DQS}$, as measured from one falling edge to the next consecutive rising edge.
27. tDQSH describes the instantaneous differential input high pulse width on DQS - $\overline{DQS}$, as measured from one rising edge to the next consecutive falling edge.
28. tDQSH,act + tDQSL,act = 1 tCK,act ; with tXYZ,act being the actual measured value of the respective timing parameter in the application.
29. tDSH,act + tDSS,act = 1 tCK,act ; with tXYZ,act being the actual measured value of the respective timing parameter in the application.
30. tCH(abs) is the absolute instantaneous clock high pulse width, as measured from one rising edge to the following falling edge.
31. tCL(abs) is the absolute instantaneous clock low pulse width, as measured from one falling edge to the following rising edge.
32. n = from 13 cycles to 50 cycles. This row defines 38 parameters.

Package Diagram (x8)
78-Ball Fine Pitch Ball Grid Array Outline

Solder ball: Lead free (Sn-Ag-Cu)

Unit: mm

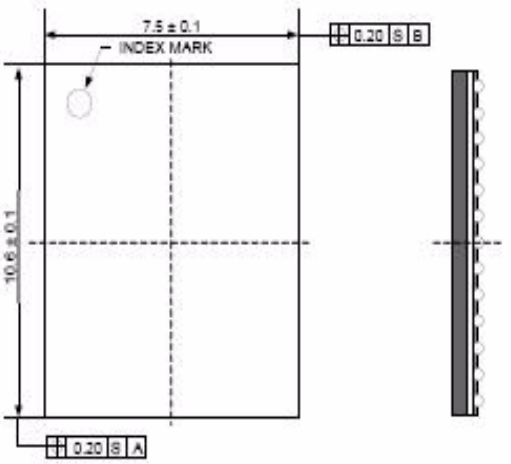

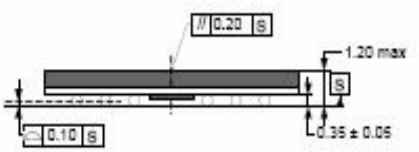

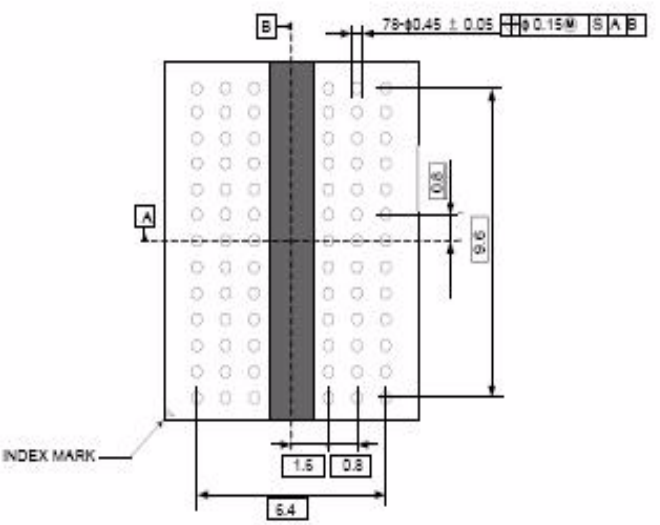

WORLDWIDE OFFICES

Taiwan (Hsinchu) - Headquarters & Sales Office

No.19-1, Li Hsin Road, Hsinchu Science Park,
Hsinchu 30078, Taiwan, R.O.C.
PHONE : 886-3-579-8308
FAX : 886-3-563-7329

Copyright, ProMOS TECHNOLOGY. Printed in Taiwan

The information in thisdocument is subject to change without notice.

ProMOS TECH makes no commitment to update or keep current the information contained in this docment. No part of this document may be copied or reproduced in any form or by any means without the prior written consent of ProMOS TECH.

ProMOS TECH subjects its products to normal quality control sampling techniques which are intended to provide an assurance of high quality products suitable for usual commercial applications. ProMOS TECH does not do testing appropriate to provide 100% product quality assurance and does not assume any liabity for consequential or incidental arising from any use of its products. If such products are to be used in applications in which personal injury might occur from failure, purchaser must do its own quality assurance testing appropriate to such applications.