TDA - Power 1: Analog

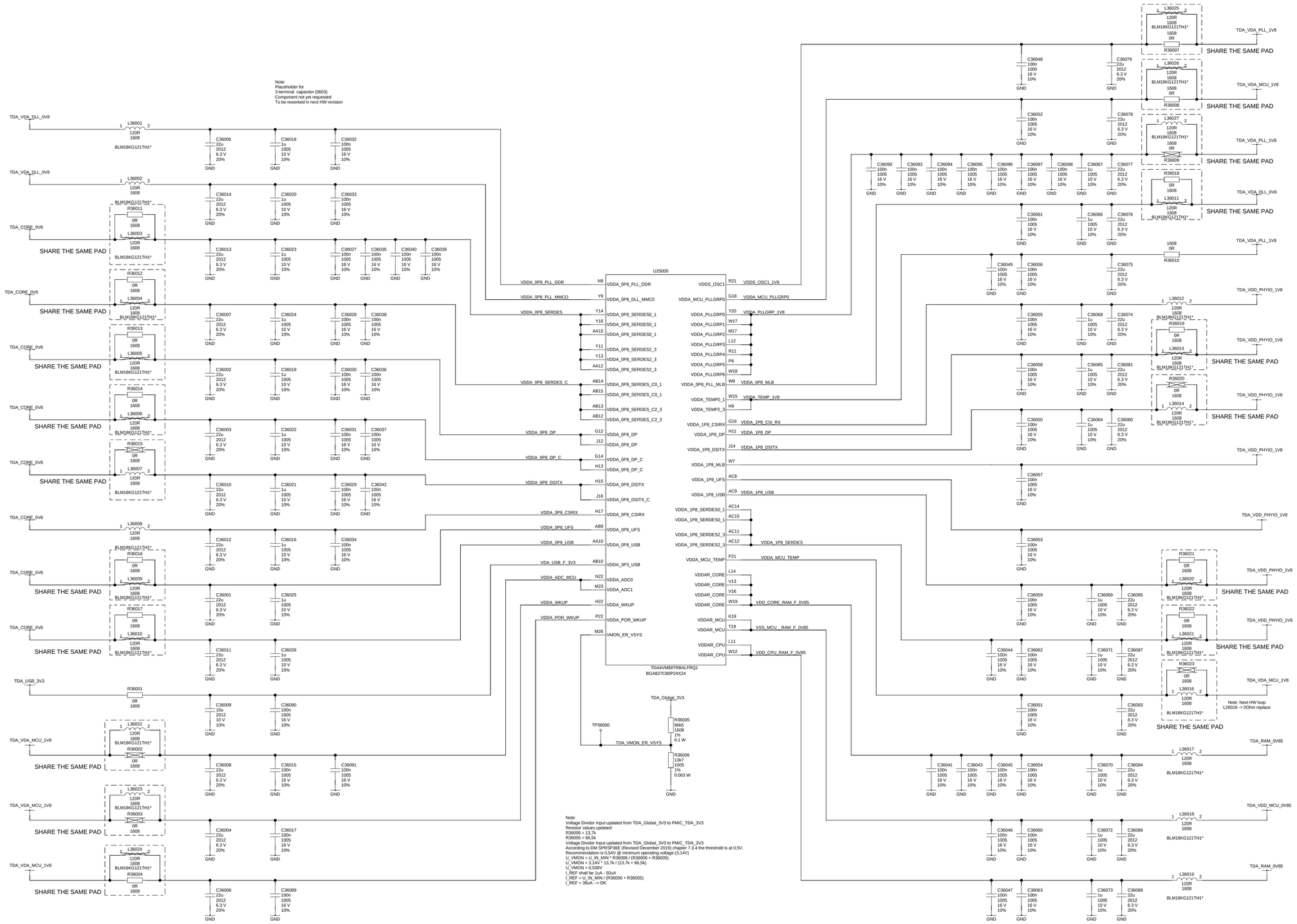

TDA - Power 2: Digital

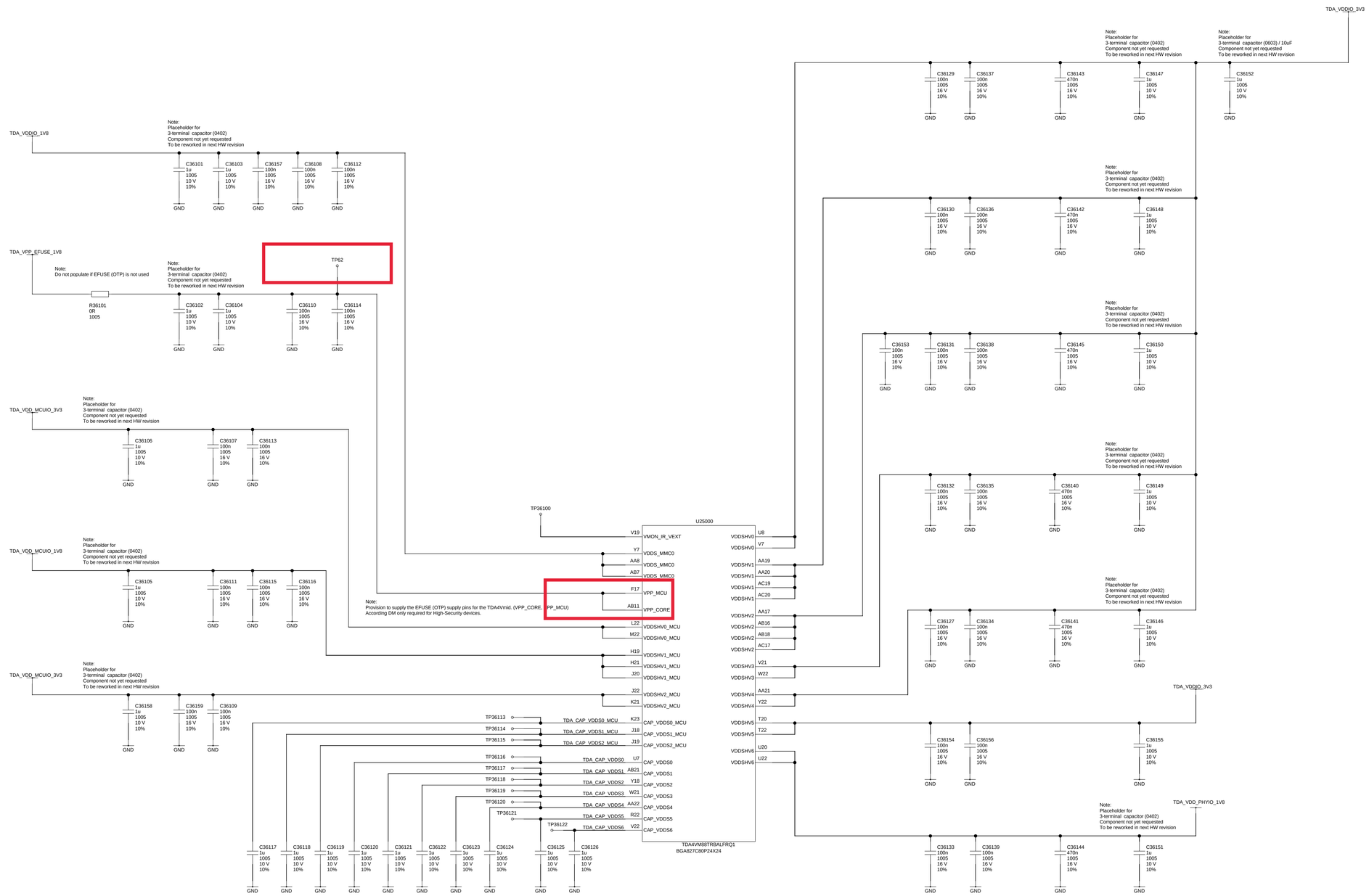

TDA - Power 3: Digital

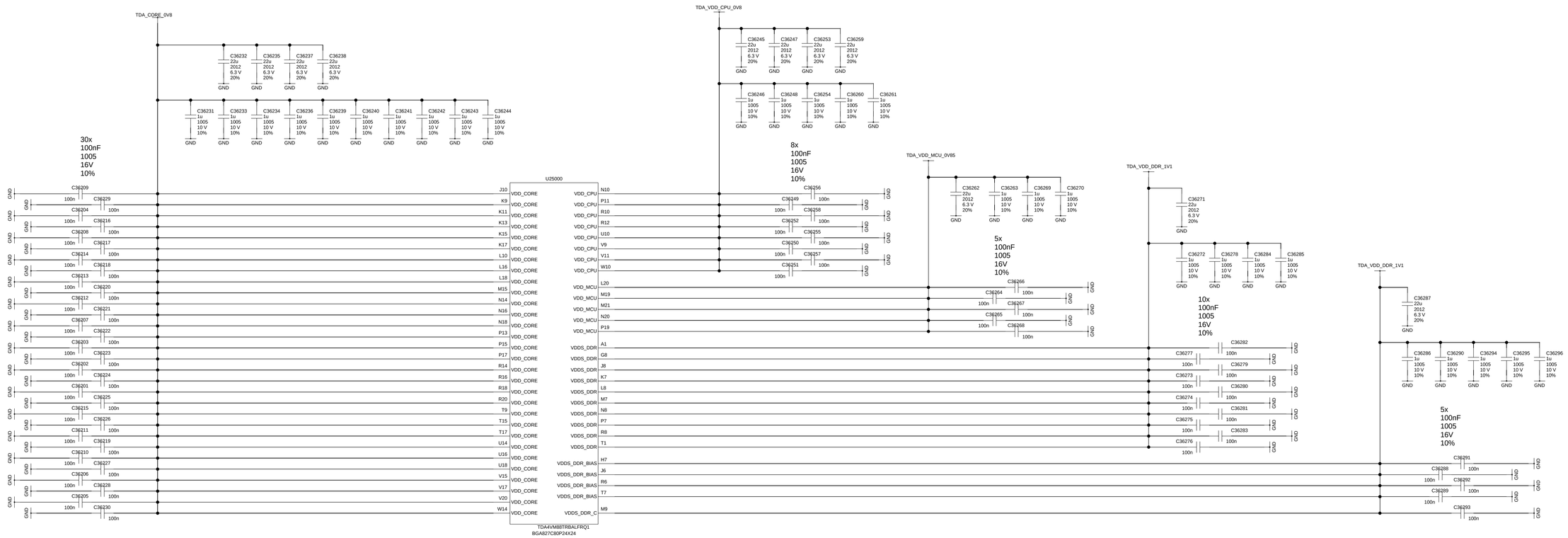

TDA_PSU_PMIC_A (Power Supply Unit for Performance Micro - PMIC-A)

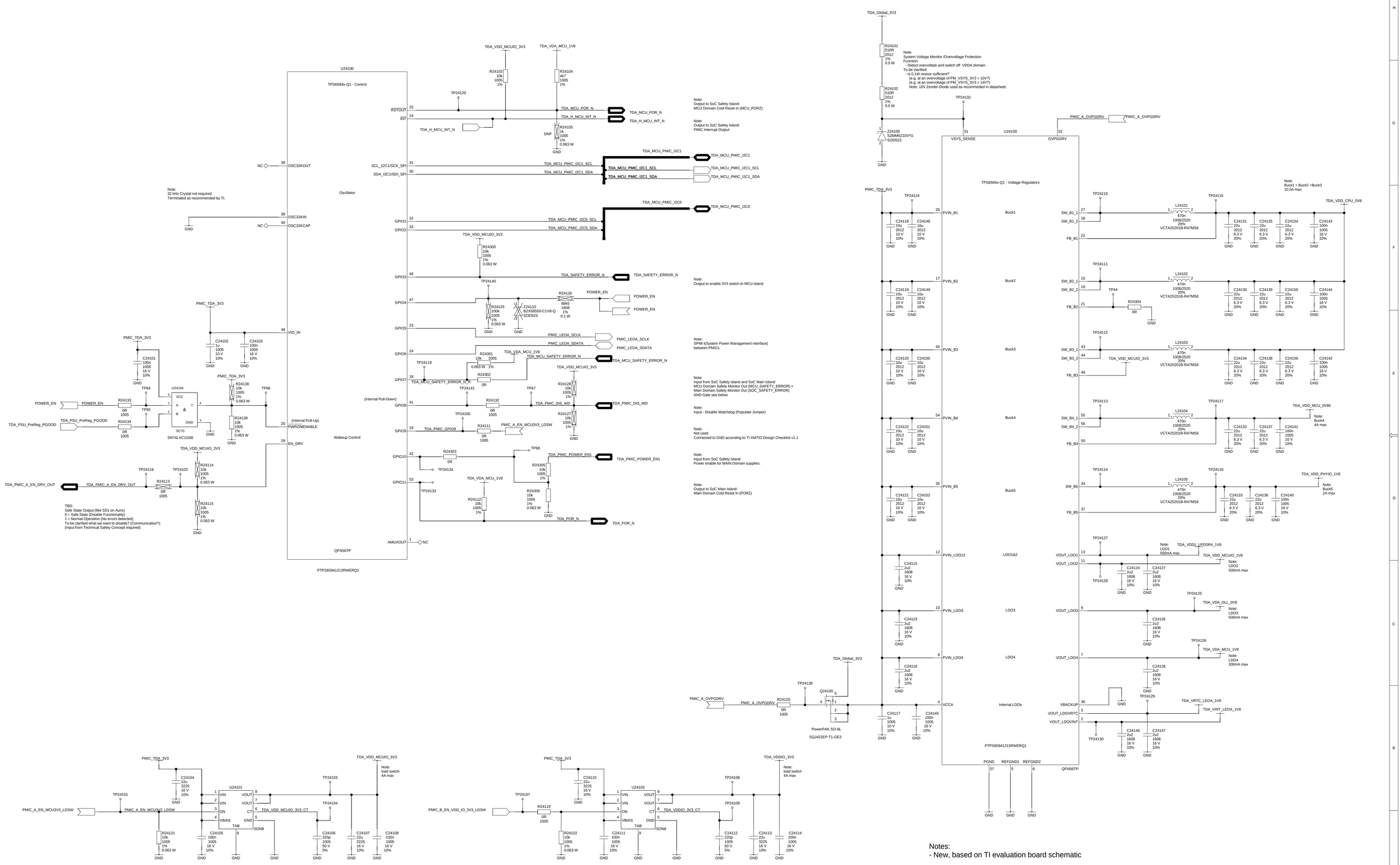

Notes:
- New, based on TI evaluation board schematic

TDA_PSU_PMIC_B (Power Supply Unit for Performance Micro - PMIC-B)

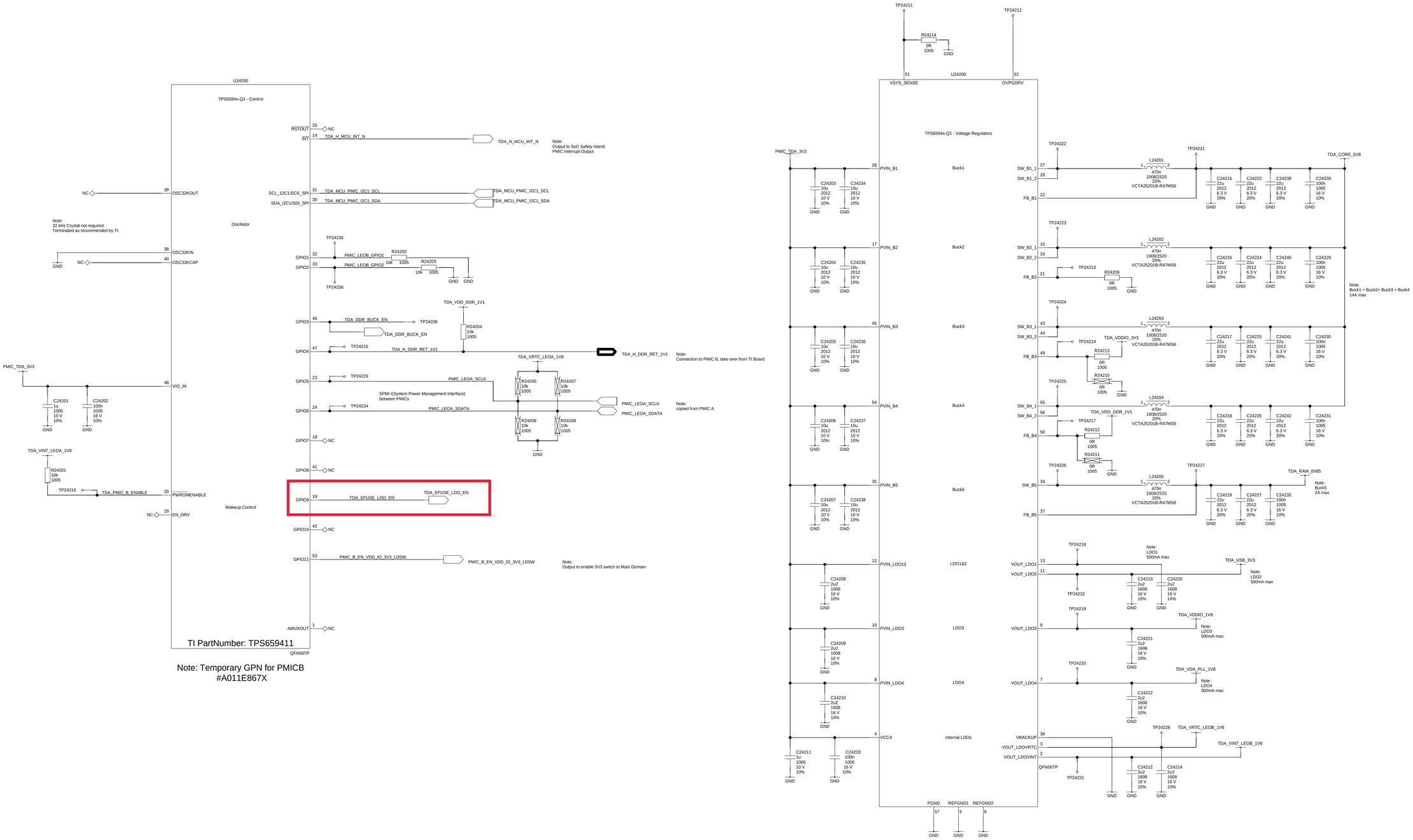

Notes:
- New, based on TI evaluation board schematic

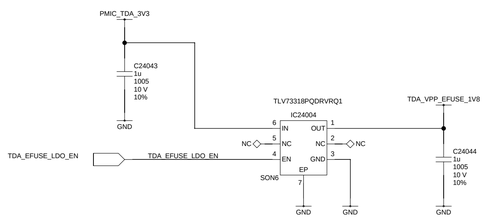
PMIC_TDA_3V3
C24043
1u
1005
10 V
10%
GND
TLV73318PQDRVRQ1
IC24004
6
IN
OUT
1
5
NC
NC
2
NC
NC
4
EN
GND
3
EP
SON6
7
GND
GND
TDA_EFUSE_LDO_EN
TDA_EFUSE_LDO_EN
TDA_VPP_EFUSE_1V8
C24044
1u
1005
10 V
10%
GND