NOTES, UNLESS OTHERWISE SPECIFIED:

1. RESISTANCE VALUES IN OHMS.
2. CAPACITANCE VALUES IN MICROFARADS.
3. REFERENCE DESIGNATORS USED:
4. ALL 0.1 uF AND 0.01uF CAPACITORS ARE DECOUPLING CAPS UNLESS OTHERWISE NOTED. THEY ARE SHOWN ON THE PAGE WITH THE INTEGRATED CIRCUITS THEY SHOULD BE PLACED NEAR.

A	Initial schematic for layout	3/31/2011	RRP
B	CHANGES FOR BETA BUILD	1/09/2012	RRP
C	Added 2 codecs, audio amplifiers	8/22/2012	RRP
D	Sync'd codec clocks, HPI_ON to IO Exp, MSP430 to LCD, minor fixes	12/19/2013	MM

Schematic Contents

01 - TITLE PAGE
02 - TMS320C5517 GPIO/MMC/SPI/I2C
03 - MMC1/McSPI MUXING
04 - I/O MUXING
05 - I2S2 MUXING
06 - HPI I/O DISABLE
07 - BOOTMODE INTERFACE
08 - HPI INTERFACE CONNECTOR
09 - HPI
10 - HPI LEVEL TRANSLATORS
11 - TMS320C5517 CLOCKS/JTAG/USB
12 - EMULATION - JTAG
13 - TMS320C5517 EMIF
14 - CC Board Interface
15 - TMS320C5517 Power
16 - CPU Decoupling Caps
17 - RESET
18 - Mobile DRAM Interface
19 - NAND Flash Interface
20 - NOR Flash Interface
21 - Power Input
22 - TPS65023 Power Management
23 - RTC REGULATOR
24 - POWER Router
25 - MMC / SD
26 - UART
27 - I2C EEPROM/SPI FLASH
28 - I2C EXPANDER
29 - SAR Resistor Network
30 - CODEC1
31 - CODEC2
32 - AUDIO AMPS
33 - COLOR LCD INTERFACE
34 - MSP430
35 - MSP430 GLUE
36 - MSP430 SPI
37 - MSP430 OPTION SWITCH
38 - MSP430 POWER
39 - REVISION HISTORY

REVISION STATUS OF SHEETS

REV	D	D	D	D	A	D	D	A	B	
SHEET	31	32	33	34	35	36	37	38	39	
REV	A	D	A	A	A	D	B	D	D	D
SHEET	21	22	23	24	25	26	27	28	29	30
REV	D	A	A	A	D	A	B	D	A	A
SHEET	11	12	13	14	15	16	17	18	19	20
REV	D	A	D	D	D	D	B	D	D	A
SHEET	1	2	3	4	5	6	7	8	9	10

DWN	R.R.P.	DATE 3/31/2011
CHK	T.W.K.	DATE 3/31/2011
ENGR	R.R.P.	DATE 3/31/2011
ENGR-MGR	R.R.P.	DATE 3/31/2011
QA	C.M.D.	DATE 3/31/2011
MFG	R.R.P.	DATE 3/31/2011
RLSE	R.R.P.	DATE 3/31/2011

NEXT ASSY	USED ON
APPLICATION	

SPECTRUM DIGITAL INCORPORATED
Title: TMS320C5517 EVALUATION MODULE
Page Contents: TITLE SHEET
Size:B DWG NO 514662-0001 Revision: D
Date: Friday, January 03, 2014 Sheet 1 of 39

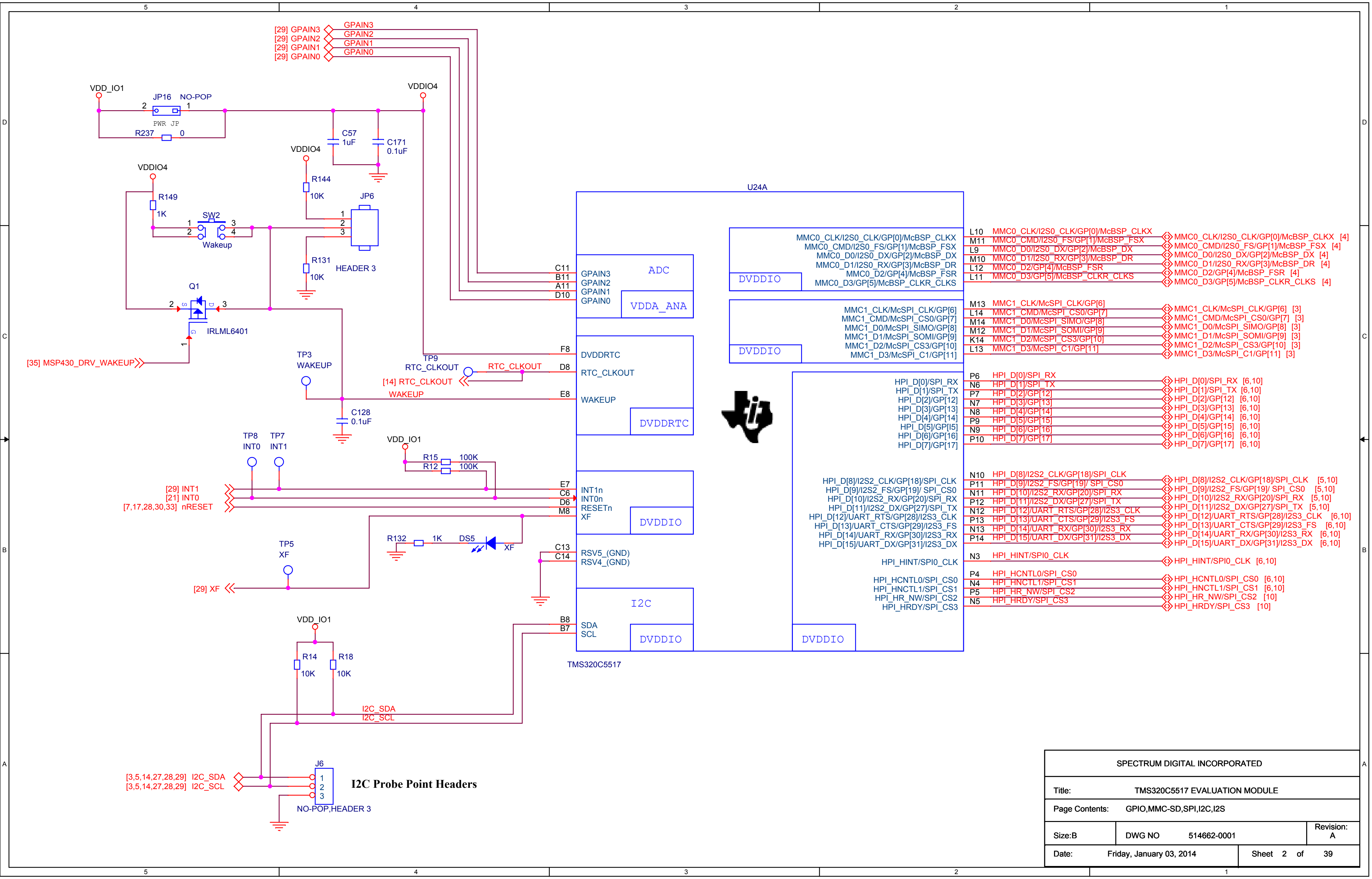

[29] GPAIN3
[29] GPAIN2
[29] GPAIN1
[29] GPAIN0
GPAIN3
GPAIN2
GPAIN1
GPAIN0
VDD_IO1
JP16 NO-POP
PWR JP
R237 0
VDDIO4
C57 1uF
C171 0.1uF
R144 10K
R149 1K
SW2
Wakeup
JP6
HEADER 3
R131 10K
Q1
IRLML6401
[35] MSP430_DRV_WAKEUP
TP3 WAKEUP
TP9 RTC_CLKOUT
RTC_CLKOUT
[14] RTC_CLKOUT
WAKEUP
C128 0.1uF
TP8 INT0
TP7 INT1
R15 100K
R12 100K
[29] INT1
[21] INT0
[7,17,28,30,33] nRESET
TP5 XF
R132 1K
DS5
XF
[29] XF
U24A
C11 B11 A11 D10
GPAIN3 GPAIN2 GPAIN1 GPAIN0
ADC
VDDA_ANA
F8 DVDDRTC
D8 RTC_CLKOUT
E8 WAKEUP
DVDDRTC
E7 INT1n
C6 INT0n
D6 RESETn
M8 XF
DVDDIO
C13 RSV5_(GND)
C14 RSV4_(GND)
I2C
B8 SDA
B7 SCL
DVDDIO
TMS320C5517
DVDDIO
MMC0_CLK/I2S0_CLK/GP[0]/McBSP_CLKX
MMC0_CMD/I2S0_FS/GP[1]/McBSP_FSX
MMC0_D0/I2S0_DX/GP[2]/McBSP_DX
MMC0_D1/I2S0_RX/GP[3]/McBSP_DR
MMC0_D2/GP[4]/McBSP_FSR
MMC0_D3/GP[5]/McBSP_CLKR_CLKS
L10 M11 L9 M10 L12 L11
MMC0_CLK/I2S0_CLK/GP[0]/McBSP_CLKX [4]
MMC0_CMD/I2S0_FS/GP[1]/McBSP_FSX [4]
MMC0_D0/I2S0_DX/GP[2]/McBSP_DX [4]
MMC0_D1/I2S0_RX/GP[3]/McBSP_DR [4]
MMC0_D2/GP[4]/McBSP_FSR [4]
MMC0_D3/GP[5]/McBSP_CLKR_CLKS [4]
DVDDIO
MMC1_CLK/McSPI_CLK/GP[6]
MMC1_CMD/McSPI_CS0/GP[7]
MMC1_D0/McSPI_SIMO/GP[8]
MMC1_D1/McSPI_SOMI/GP[9]
MMC1_D2/McSPI_CS3/GP[10]
MMC1_D3/McSPI_C1/GP[11]
M13 L14 M14 M12 K14 L13
MMC1_CLK/McSPI_CLK/GP[6] [3]
MMC1_CMD/McSPI_CS0/GP[7] [3]
MMC1_D0/McSPI_SIMO/GP[8] [3]
MMC1_D1/McSPI_SOMI/GP[9] [3]
MMC1_D2/McSPI_CS3/GP[10] [3]
MMC1_D3/McSPI_C1/GP[11] [3]
HPI_D[0]/SPI_RX
HPI_D[1]/SPI_TX
HPI_D[2]/GP[12]
HPI_D[3]/GP[13]
HPI_D[4]/GP[14]
HPI_D[5]/GP[15]
HPI_D[6]/GP[16]
HPI_D[7]/GP[17]
P6 N6 P7 N7 N8 P9 N9 P10
HPI_D[0]/SPI_RX [6,10]
HPI_D[1]/SPI_TX [6,10]
HPI_D[2]/GP[12] [6,10]
HPI_D[3]/GP[13] [6,10]
HPI_D[4]/GP[14] [6,10]
HPI_D[5]/GP[15] [6,10]
HPI_D[6]/GP[16] [6,10]
HPI_D[7]/GP[17] [6,10]
HPI_D[8]/I2S2_CLK/GP[18]/SPI_CLK
HPI_D[9]/I2S2_FS/GP[19]/ SPI_CS0
HPI_D[10]/I2S2_RX/GP[20]/SPI_RX
HPI_D[11]/I2S2_DX/GP[27]/SPI_TX
HPI_D[12]/UART_RTS/GP[28]/I2S3_CLK
HPI_D[13]/UART_CTS/GP[29]/I2S3_FS
HPI_D[14]/UART_RX/GP[30]/I2S3_RX
HPI_D[15]/UART_DX/GP[31]/I2S3_DX
N10 P11 N11 P12 N12 P13 N13 P14
HPI_D[8]/I2S2_CLK/GP[18]/SPI_CLK [5,10]
HPI_D[9]/I2S2_FS/GP[19]/ SPI_CS0 [5,10]
HPI_D[10]/I2S2_RX/GP[20]/SPI_RX [5,10]
HPI_D[11]/I2S2_DX/GP[27]/SPI_TX [5,10]
HPI_D[12]/UART_RTS/GP[28]/I2S3_CLK [6,10]
HPI_D[13]/UART_CTS/GP[29]/I2S3_FS [6,10]
HPI_D[14]/UART_RX/GP[30]/I2S3_RX [6,10]
HPI_D[15]/UART_DX/GP[31]/I2S3_DX [6,10]
HPI_HINT/SPI0_CLK
N3
HPI_HINT/SPI0_CLK [6,10]
HPI_HCNTL0/SPI_CS0
HPI_HNCTL1/SPI_CS1
HPI_HR_NW/SPI_CS2
HPI_HRDY/SPI_CS3
P4 N4 P5 N5
HPI_HCNTL0/SPI_CS0 [6,10]
HPI_HNCTL1/SPI_CS1 [6,10]
HPI_HR_NW/SPI_CS2 [10]
HPI_HRDY/SPI_CS3 [10]
DVDDIO
VDD_IO1
R14 10K
R18 10K
I2C_SDA
I2C_SCL
J6
[3,5,14,27,28,29] I2C_SDA
[3,5,14,27,28,29] I2C_SCL
NO-POP,HEADER 3
I2C Probe Point Headers
5 4 3 2 1
D C B A

SPECTRUM DIGITAL INCORPORATED

Title: TMS320C5517 EVALUATION MODULE

Page Contents: GPIO,MMC-SD,SPI,I2C,I2S

Size:B DWG NO 514662-0001 Revision: A

Date: Friday, January 03, 2014 Sheet 2 of 39

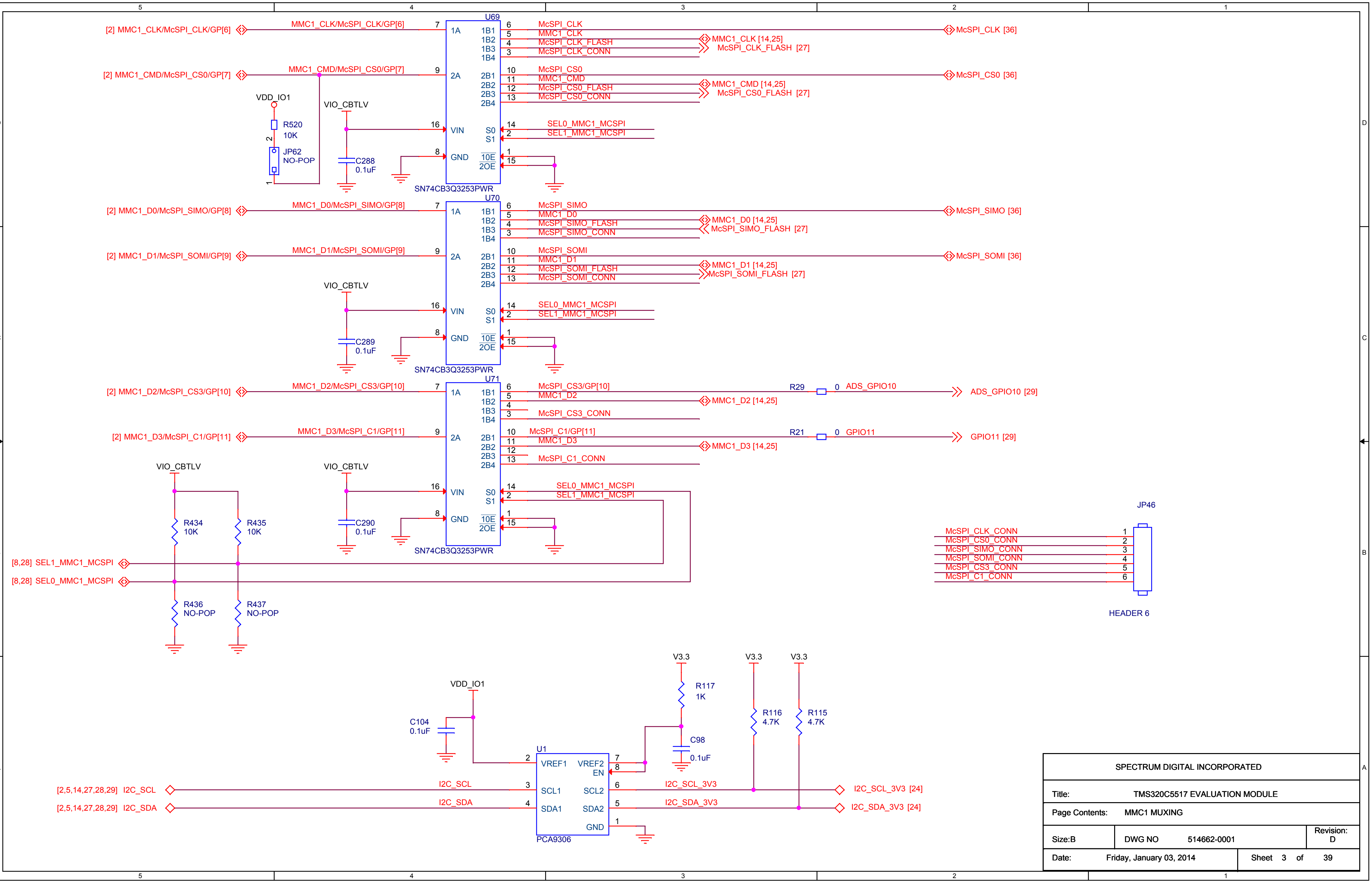
U69
SN74CB3Q3253PWR
[2] MMC1_CLK/McSPI_CLK/GP[6]
MMC1_CLK/McSPI_CLK/GP[6]
[2] MMC1_CMD/McSPI_CS0/GP[7]
MMC1_CMD/McSPI_CS0/GP[7]
1A
1B1
1B2
1B3
1B4
2A
2B1
2B2
2B3
2B4
VIN
S0
S1
GND
1OE
2OE
McSPI_CLK
MMC1_CLK
McSPI_CLK_FLASH
McSPI_CLK_CONN
McSPI_CLK [36]
MMC1_CLK [14,25]
McSPI_CLK_FLASH [27]
McSPI_CS0
MMC1_CMD
McSPI_CS0_FLASH
McSPI_CS0_CONN
McSPI_CS0 [36]
MMC1_CMD [14,25]
McSPI_CS0_FLASH [27]
SEL0_MMC1_MCSPI
SEL1_MMC1_MCSPI
VDD_IO1
R520
10K
JP62
NO-POP
VIO_CBTLV
C288
0.1uF
U70
SN74CB3Q3253PWR
[2] MMC1_D0/McSPI_SIMO/GP[8]
MMC1_D0/McSPI_SIMO/GP[8]
[2] MMC1_D1/McSPI_SOMI/GP[9]
MMC1_D1/McSPI_SOMI/GP[9]
McSPI_SIMO
MMC1_D0
McSPI_SIMO_FLASH
McSPI_SIMO_CONN
McSPI_SIMO [36]
MMC1_D0 [14,25]
McSPI_SIMO_FLASH [27]
McSPI_SOMI
MMC1_D1
McSPI_SOMI_FLASH
McSPI_SOMI_CONN
McSPI_SOMI [36]
MMC1_D1 [14,25]
McSPI_SOMI_FLASH [27]
C289
0.1uF
U71
SN74CB3Q3253PWR
[2] MMC1_D2/McSPI_CS3/GP[10]
MMC1_D2/McSPI_CS3/GP[10]
[2] MMC1_D3/McSPI_C1/GP[11]
MMC1_D3/McSPI_C1/GP[11]
McSPI_CS3/GP[10]
MMC1_D2
McSPI_CS3_CONN
R29
0
ADS_GPIO10
ADS_GPIO10 [29]
MMC1_D2 [14,25]
McSPI_C1/GP[11]
MMC1_D3
McSPI_C1_CONN
R21
0
GPIO11
GPIO11 [29]
MMC1_D3 [14,25]
C290
0.1uF
R434
10K
R435
10K
R436
NO-POP
R437
NO-POP
[8,28] SEL1_MMC1_MCSPI
[8,28] SEL0_MMC1_MCSPI
JP46
McSPI_CLK_CONN
McSPI_CS0_CONN
McSPI_SIMO_CONN
McSPI_SOMI_CONN
McSPI_CS3_CONN
McSPI_C1_CONN
HEADER 6
U1
PCA9306
VREF1
VREF2
EN
SCL1
SCL2
SDA1
SDA2
GND
C104
0.1uF
V3.3
R117
1K
C98
0.1uF
R116
4.7K
R115
4.7K
[2,5,14,27,28,29] I2C_SCL
[2,5,14,27,28,29] I2C_SDA
I2C_SCL
I2C_SDA
I2C_SCL_3V3
I2C_SDA_3V3
I2C_SCL_3V3 [24]
I2C_SDA_3V3 [24]

SPECTRUM DIGITAL INCORPORATED	
Title:	TMS320C5517 EVALUATION MODULE
Page Contents:	MMC1 MUXING
Size:B	DWG NO 514662-0001 — Revision: D
Date: Friday, January 03, 2014	Sheet 3 of 39

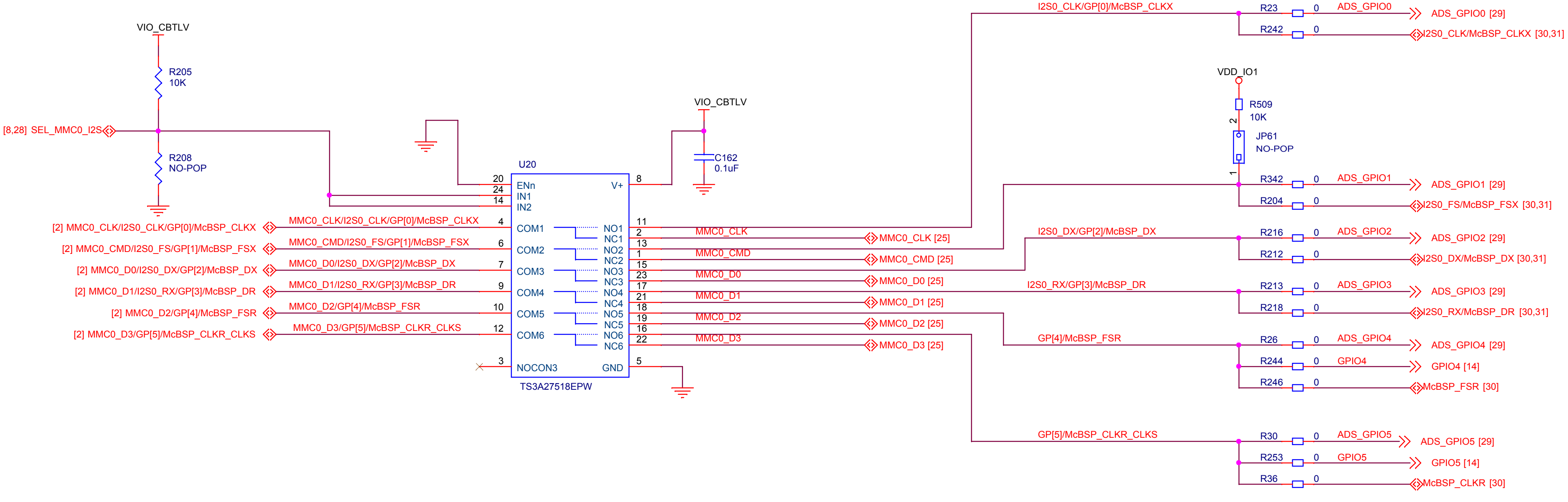
VIO_CBTLV
R205
10K
[8,28] SEL_MMC0_I2S
R208
NO-POP
U20
20
24
14
ENn
IN1
IN2
V+
8
VIO_CBTLV
C162
0.1uF
[2] MMC0_CLK/I2S0_CLK/GP[0]/McBSP_CLKX
[2] MMC0_CMD/I2S0_FS/GP[1]/McBSP_FSX
[2] MMC0_D0/I2S0_DX/GP[2]/McBSP_DX
[2] MMC0_D1/I2S0_RX/GP[3]/McBSP_DR
[2] MMC0_D2/GP[4]/McBSP_FSR
[2] MMC0_D3/GP[5]/McBSP_CLKR_CLKS
MMC0_CLK/I2S0_CLK/GP[0]/McBSP_CLKX
MMC0_CMD/I2S0_FS/GP[1]/McBSP_FSX
MMC0_D0/I2S0_DX/GP[2]/McBSP_DX
MMC0_D1/I2S0_RX/GP[3]/McBSP_DR
MMC0_D2/GP[4]/McBSP_FSR
MMC0_D3/GP[5]/McBSP_CLKR_CLKS
4
6
7
9
10
12
COM1
COM2
COM3
COM4
COM5
COM6
NO1
NC1
NO2
NC2
NO3
NC3
NO4
NC4
NO5
NC5
NO6
NC6
11
2
13
1
15
23
17
21
18
19
16
22
3
NOCON3
GND
5
TS3A27518EPW
MMC0_CLK
MMC0_CMD
MMC0_D0
MMC0_D1
MMC0_D2
MMC0_D3
MMC0_CLK [25]
MMC0_CMD [25]
MMC0_D0 [25]
MMC0_D1 [25]
MMC0_D2 [25]
MMC0_D3 [25]
I2S0_CLK/GP[0]/McBSP_CLKX
R23
0
ADS_GPIO0
ADS_GPIO0 [29]
R242
0
I2S0_CLK/McBSP_CLKX [30,31]
VDD_IO1
R509
10K
2
JP61
NO-POP
1
R342
0
ADS_GPIO1
ADS_GPIO1 [29]
R204
0
I2S0_FS/McBSP_FSX [30,31]
I2S0_DX/GP[2]/McBSP_DX
R216
0
ADS_GPIO2
ADS_GPIO2 [29]
R212
0
I2S0_DX/McBSP_DX [30,31]
I2S0_RX/GP[3]/McBSP_DR
R213
0
ADS_GPIO3
ADS_GPIO3 [29]
R218
0
I2S0_RX/McBSP_DR [30,31]
GP[4]/McBSP_FSR
R26
0
ADS_GPIO4
ADS_GPIO4 [29]
R244
0
GPIO4
GPIO4 [14]
R246
0
McBSP_FSR [30]
GP[5]/McBSP_CLKR_CLKS
R30
0
ADS_GPIO5
ADS_GPIO5 [29]
R253
0
GPIO5
GPIO5 [14]
R36
0
McBSP_CLKR [30]

SPECTRUM DIGITAL INCORPORATED

Title: TMS320C5517 EVALUATION MODULE

Page Contents: I/O MULTIPLEXING

Size:B
DWG NO 514662-0001
Revision: D

Date: Friday, January 03, 2014
Sheet 4 of 39

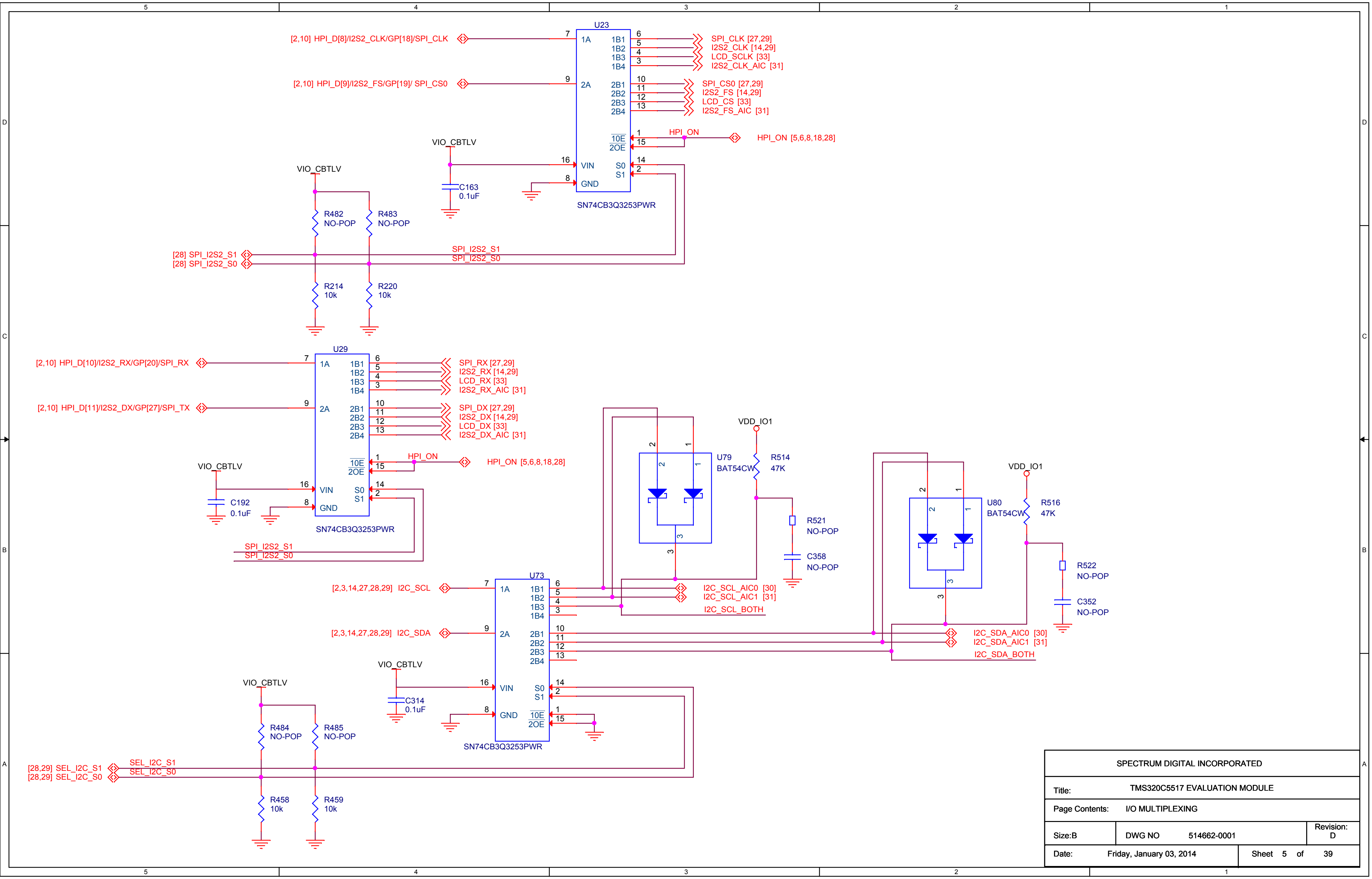
5
4
3
2
1
D
C
B
A
U23
[2,10] HPI_D[8]/I2S2_CLK/GP[18]/SPI_CLK
[2,10] HPI_D[9]/I2S2_FS/GP[19]/ SPI_CS0
1A
2A
1B1
1B2
1B3
1B4
2B1
2B2
2B3
2B4
SPI_CLK [27,29]
I2S2_CLK [14,29]
LCD_SCLK [33]
I2S2_CLK_AIC [31]
SPI_CS0 [27,29]
I2S2_FS [14,29]
LCD_CS [33]
I2S2_FS_AIC [31]
HPI_ON
HPI_ON [5,6,8,18,28]
1OE
2OE
VIO_CBTLV
C163
0.1uF
VIN
GND
S0
S1
SN74CB3Q3253PWR
R482
NO-POP
R483
NO-POP
[28] SPI_I2S2_S1
[28] SPI_I2S2_S0
SPI_I2S2_S1
SPI_I2S2_S0
R214
10k
R220
10k
U29
[2,10] HPI_D[10]/I2S2_RX/GP[20]/SPI_RX
[2,10] HPI_D[11]/I2S2_DX/GP[27]/SPI_TX
SPI_RX [27,29]
I2S2_RX [14,29]
LCD_RX [33]
I2S2_RX_AIC [31]
SPI_DX [27,29]
I2S2_DX [14,29]
LCD_DX [33]
I2S2_DX_AIC [31]
HPI_ON
HPI_ON [5,6,8,18,28]
VIO_CBTLV
C192
0.1uF
SN74CB3Q3253PWR
SPI_I2S2_S1
SPI_I2S2_S0
U79
BAT54CW
VDD_IO1
R514
47K
R521
NO-POP
C358
NO-POP
U80
BAT54CW
VDD_IO1
R516
47K
R522
NO-POP
C352
NO-POP
U73
[2,3,14,27,28,29] I2C_SCL
[2,3,14,27,28,29] I2C_SDA
I2C_SCL_AIC0 [30]
I2C_SCL_AIC1 [31]
I2C_SCL_BOTH
I2C_SDA_AIC0 [30]
I2C_SDA_AIC1 [31]
I2C_SDA_BOTH
VIO_CBTLV
C314
0.1uF
VIO_CBTLV
R484
NO-POP
R485
NO-POP
SN74CB3Q3253PWR
[28,29] SEL_I2C_S1
[28,29] SEL_I2C_S0
SEL_I2C_S1
SEL_I2C_S0
R458
10k
R459
10k

SPECTRUM DIGITAL INCORPORATED

Title: TMS320C5517 EVALUATION MODULE

Page Contents: I/O MULTIPLEXING

Size:B	DWG NO 514662-0001	Revision: D
Date: Friday, January 03, 2014	Sheet 5 of 39	

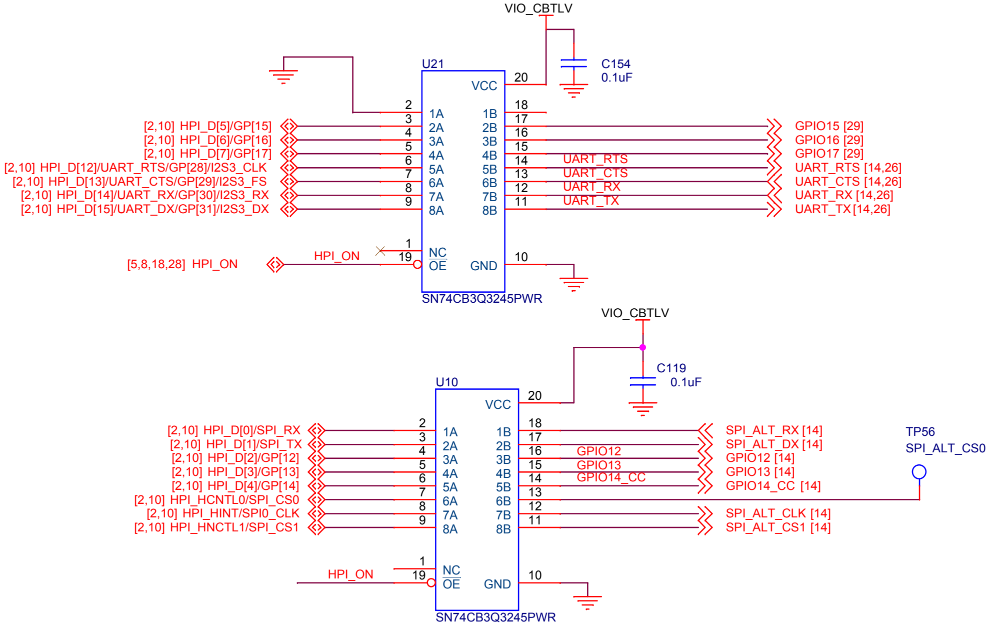
VIO_CBTLV
C154
0.1uF
U21
VCC
20
2
3
4
5
6
7
8
9
1A
2A
3A
4A
5A
6A
7A
8A
1B
2B
3B
4B
5B
6B
7B
8B
18
17
16
15
14
13
12
11
[2,10] HPI_D[5]/GP[15]
[2,10] HPI_D[6]/GP[16]
[2,10] HPI_D[7]/GP[17]
[2,10] HPI_D[12]/UART_RTS/GP[28]/I2S3_CLK
[2,10] HPI_D[13]/UART_CTS/GP[29]/I2S3_FS
[2,10] HPI_D[14]/UART_RX/GP[30]/I2S3_RX
[2,10] HPI_D[15]/UART_DX/GP[31]/I2S3_DX
UART_RTS
UART_CTS
UART_RX
UART_TX
GPIO15 [29]
GPIO16 [29]
GPIO17 [29]
UART_RTS [14,26]
UART_CTS [14,26]
UART_RX [14,26]
UART_TX [14,26]
1
19
NC
OE
GND
10
HPI_ON
[5,8,18,28] HPI_ON
SN74CB3Q3245PWR
VIO_CBTLV
C119
0.1uF
U10
VCC
20
[2,10] HPI_D[0]/SPI_RX
[2,10] HPI_D[1]/SPI_TX
[2,10] HPI_D[2]/GP[12]
[2,10] HPI_D[3]/GP[13]
[2,10] HPI_D[4]/GP[14]
[2,10] HPI_HCNTL0/SPI_CS0
[2,10] HPI_HINT/SPI0_CLK
[2,10] HPI_HNCTL1/SPI_CS1
2
3
4
5
6
7
8
9
1A
2A
3A
4A
5A
6A
7A
8A
1B
2B
3B
4B
5B
6B
7B
8B
18
17
16
15
14
13
12
11
GPIO12
GPIO13
GPIO14_CC
SPI_ALT_RX [14]
SPI_ALT_DX [14]
GPIO12 [14]
GPIO13 [14]
GPIO14_CC [14]
SPI_ALT_CLK [14]
SPI_ALT_CS1 [14]
TP56
SPI_ALT_CS0
1
19
NC
OE
GND
10
HPI_ON
SN74CB3Q3245PWR

SPECTRUM DIGITAL INCORPORATED

Title: TMS320C5517 EVALUATION MODULE

Page Contents: I/O DISABLE

Size:B
DWG NO 514662-0001
Revision: D

Date: Friday, January 03, 2014
Sheet 6 of 39

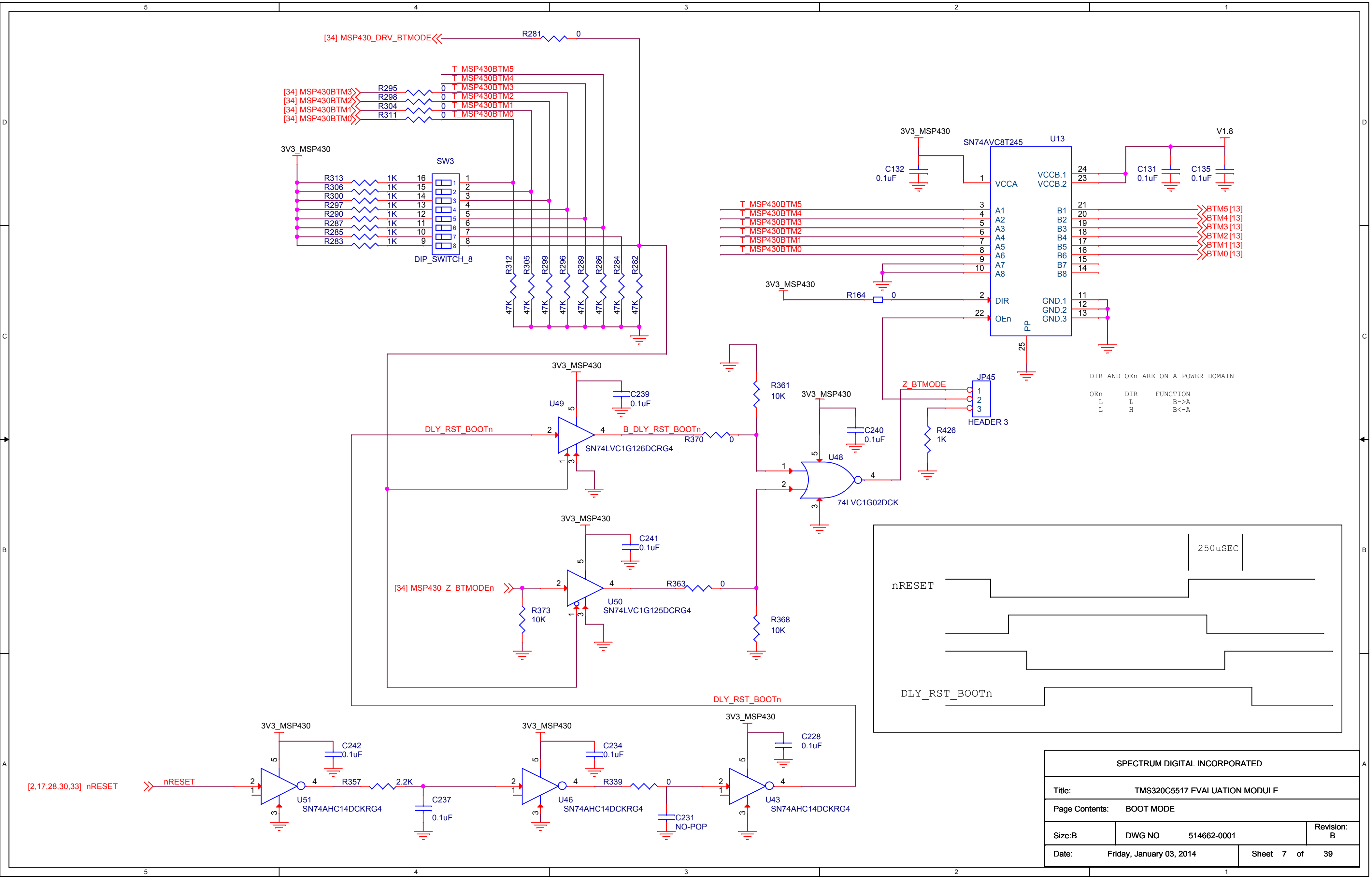
5
4
3
2
1
D
C
B
A
[34] MSP430_DRV_BTMODE
R281
0
T_MSP430BTM5
T_MSP430BTM4
T_MSP430BTM3
T_MSP430BTM2
T_MSP430BTM1
T_MSP430BTM0
[34] MSP430BTM3
[34] MSP430BTM2
[34] MSP430BTM1
[34] MSP430BTM0
R295
R298
R304
R311
0
3V3_MSP430
SW3
R313
R306
R300
R297
R290
R287
R285
R283
1K
16
15
14
13
12
11
10
9
1
2
3
4
5
6
7
8
DIP_SWITCH_8
R312
R305
R299
R296
R289
R286
R284
R282
47K
3V3_MSP430
SN74AVC8T245
U13
V1.8
C132
0.1uF
C131
0.1uF
C135
0.1uF
VCCA
VCCB.1
VCCB.2
24
23
A1
A2
A3
A4
A5
A6
A7
A8
B1
B2
B3
B4
B5
B6
B7
B8
21
20
19
18
17
16
15
14
BTM5[13]
BTM4[13]
BTM3[13]
BTM2[13]
BTM1[13]
BTM0[13]
3V3_MSP430
R164
0
DIR
OEn
22
GND.1
GND.2
GND.3
11
12
13
PP
25
Z_BTMODE
JP45
HEADER 3
R426
1K
3V3_MSP430
U49
C239
0.1uF
DLY_RST_BOOTn
B_DLY_RST_BOOTn
R370
0
SN74LVC1G126DCRG4
R361
10K
3V3_MSP430
C240
0.1uF
U48
74LVC1G02DCK
3V3_MSP430
C241
0.1uF
[34] MSP430_Z_BTMODEn
R373
10K
R363
0
U50
SN74LVC1G125DCRG4
R368
10K
DLY_RST_BOOTn
3V3_MSP430
C242
0.1uF
[2,17,28,30,33] nRESET
nRESET
R357
2.2K
C237
0.1uF
U51
SN74AHC14DCKRG4
3V3_MSP430
C234
0.1uF
R339
0
C231
NO-POP
U46
SN74AHC14DCKRG4
3V3_MSP430
C228
0.1uF
U43
SN74AHC14DCKRG4
250uSEC
nRESET
DLY_RST_BOOTn

DIR AND OEn ARE ON A POWER DOMAIN

OEn	DIR	FUNCTION
L	L	B->A
L	H	B<-A

SPECTRUM DIGITAL INCORPORATED

Title: TMS320C5517 EVALUATION MODULE

Page Contents: BOOT MODE

Size:B
DWG NO 514662-0001
Revision: B

Date: Friday, January 03, 2014
Sheet 7 of 39

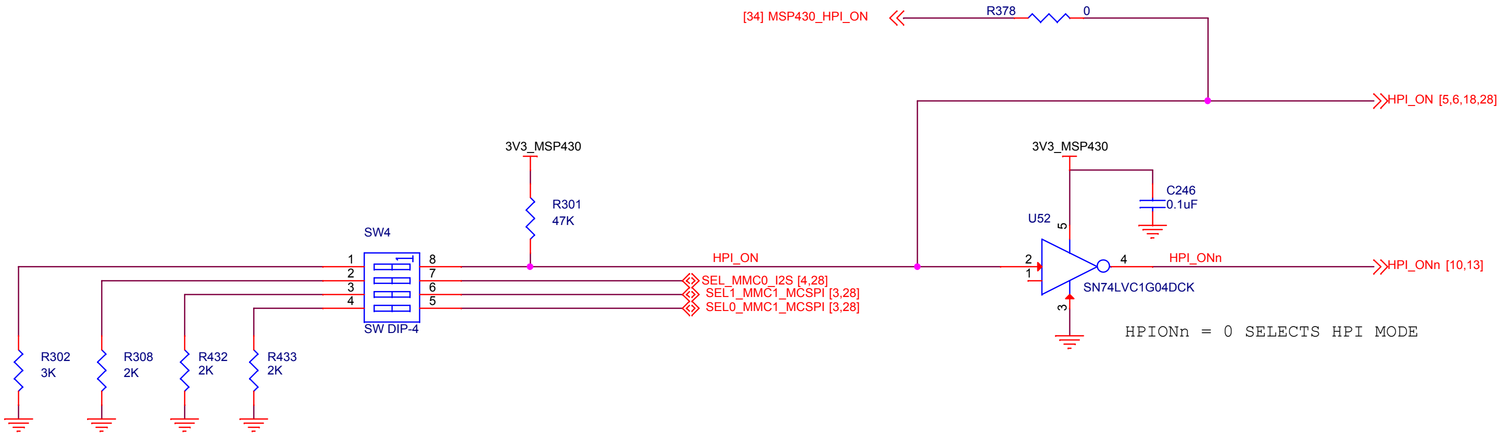
[34] MSP430_HPI_ON
R378
0
HPI_ON [5,6,18,28]
3V3_MSP430
R301
47K
3V3_MSP430
C246
0.1uF
U52
5
SW4
1
2
3
4
8
7
6
5
HPI_ON
SEL_MMC0_I2S [4,28]
SEL1_MMC1_MCSPI [3,28]
SEL0_MMC1_MCSPI [3,28]
SW DIP-4
2
1
4
3
HPI_ONn
HPI_ONn [10,13]
SN74LVC1G04DCK
R302
3K
R308
2K
R432
2K
R433
2K

HPIONn = 0 SELECTS HPI MODE

HPION = 1 SELECTS HPI MODE

SEL_MMC0_I2S
ON = MMC0/I2S0/McBSP mux to MMC/SD (MMC/SD boot)
OFF = MMC0/I2S0/McBSP mux to I2S (CODEC)

[SEL1_MMC1_MCSPI, SEL0_MMC1_MCSPI] = [OFF, OFF]: MMC1/McSPI mux to header (JP46)
[SEL1_MMC1_MCSPI, SEL0_MMC1_MCSPI] = [OFF, ON] : MMC1/McSPI mux to SPI Flash (U68)
[SEL1_MMC1_MCSPI, SEL0_MMC1_MCSPI] = [ON, OFF] : MMC1/McSPI mux to microSD card (J21) & RF Header
[SEL1_MMC1_MCSPI, SEL0_MMC1_MCSPI] = [ON, ON] : MMC1/McSPI mux to MSP430 (U54) through U45 switch

SPECTRUM DIGITAL INCORPORATED
Title: TMS320C5517 EVALUATION MODULE
Page Contents: HPI INTERFACE CONNECTOR
Size:B
DWG NO 514662-0001
Revision: D
Date: Friday, January 03, 2014
Sheet 8 of 39

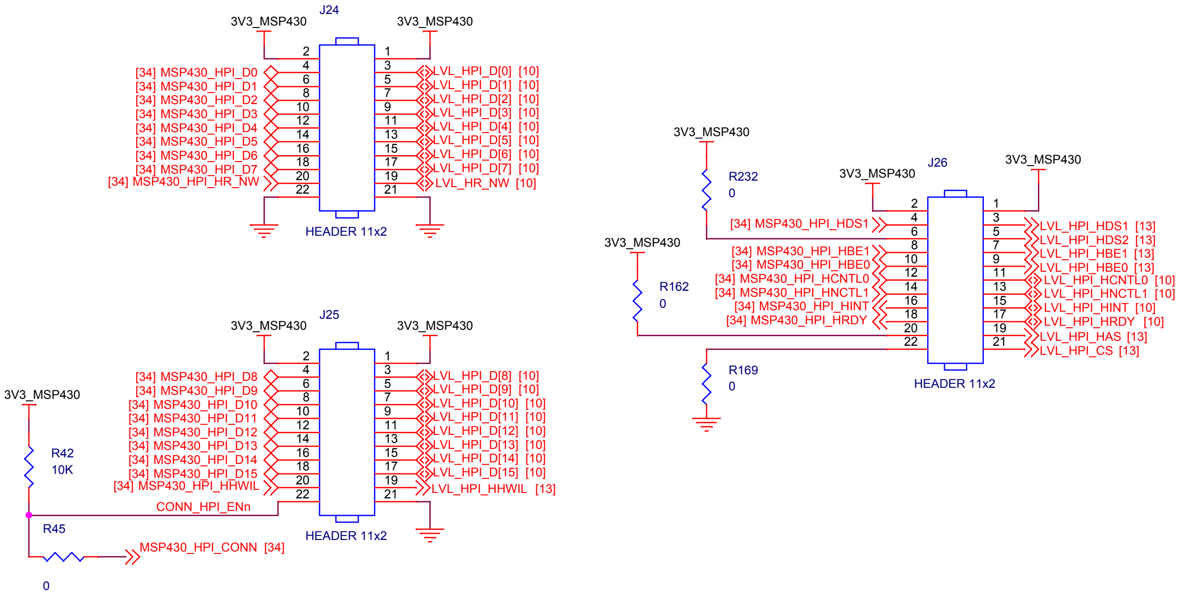
J24
3V3_MSP430
3V3_MSP430
[34] MSP430_HPI_D0
[34] MSP430_HPI_D1
[34] MSP430_HPI_D2
[34] MSP430_HPI_D3
[34] MSP430_HPI_D4
[34] MSP430_HPI_D5
[34] MSP430_HPI_D6
[34] MSP430_HPI_D7
[34] MSP430_HPI_HR_NW
LVL_HPI_D[0] [10]
LVL_HPI_D[1] [10]
LVL_HPI_D[2] [10]
LVL_HPI_D[3] [10]
LVL_HPI_D[4] [10]
LVL_HPI_D[5] [10]
LVL_HPI_D[6] [10]
LVL_HPI_D[7] [10]
LVL_HR_NW [10]
HEADER 11x2
J25
3V3_MSP430
3V3_MSP430
[34] MSP430_HPI_D8
[34] MSP430_HPI_D9
[34] MSP430_HPI_D10
[34] MSP430_HPI_D11
[34] MSP430_HPI_D12
[34] MSP430_HPI_D13
[34] MSP430_HPI_D14
[34] MSP430_HPI_D15
[34] MSP430_HPI_HHWIL
CONN_HPI_ENn
LVL_HPI_D[8] [10]
LVL_HPI_D[9] [10]
LVL_HPI_D[10] [10]
LVL_HPI_D[11] [10]
LVL_HPI_D[12] [10]
LVL_HPI_D[13] [10]
LVL_HPI_D[14] [10]
LVL_HPI_D[15] [10]
LVL_HPI_HHWIL [13]
HEADER 11x2
3V3_MSP430
R42
10K
R45
0
MSP430_HPI_CONN [34]
3V3_MSP430
R232
0
3V3_MSP430
R162
0
R169
0
J26
3V3_MSP430
3V3_MSP430
[34] MSP430_HPI_HDS1
[34] MSP430_HPI_HBE1
[34] MSP430_HPI_HBE0
[34] MSP430_HPI_HCNTL0
[34] MSP430_HPI_HNCTL1
[34] MSP430_HPI_HINT
[34] MSP430_HPI_HRDY
LVL_HPI_HDS1 [13]
LVL_HPI_HDS2 [13]
LVL_HPI_HBE1 [13]
LVL_HPI_HBE0 [13]
LVL_HPI_HCNTL0 [10]
LVL_HPI_HNCTL1 [10]
LVL_HPI_HINT [10]
LVL_HPI_HRDY [10]
LVL_HPI_HAS [13]
LVL_HPI_CS [13]
HEADER 11x2

SPECTRUM DIGITAL INCORPORATED

Title: TMS320C5517 EVALUATION MODULE

Page Contents: HPI INTERFACE

Size:B	DWG NO 514662-0001	Revision: D
Date: Friday, January 03, 2014	Sheet 9 of 39	

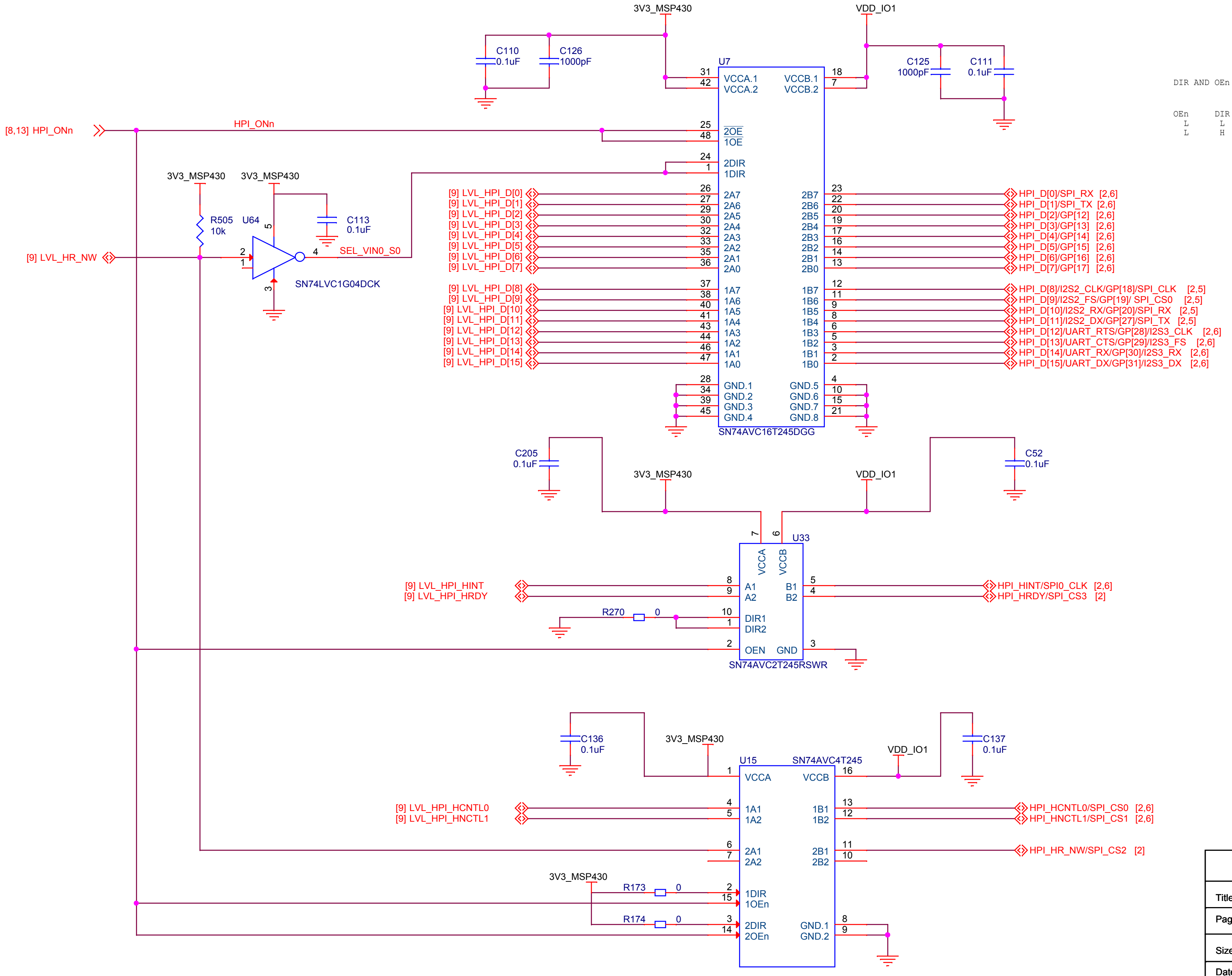
3V3_MSP430
VDD_IO1
C110 0.1uF
C126 1000pF
C125 1000pF
C111 0.1uF
U7
VCCA.1 31
VCCA.2 42
VCCB.1 18
VCCB.2 7
[8,13] HPI_ONn
HPI_ONn
25 2OE
48 1OE
24 2DIR
1 1DIR
3V3_MSP430
3V3_MSP430
R505 10k
U64
C113 0.1uF
[9] LVL_HR_NW
SEL_VIN0_S0
SN74LVC1G04DCK
[9] LVL_HPI_D[0] 26 2A7
[9] LVL_HPI_D[1] 27 2A6
[9] LVL_HPI_D[2] 29 2A5
[9] LVL_HPI_D[3] 30 2A4
[9] LVL_HPI_D[4] 32 2A3
[9] LVL_HPI_D[5] 33 2A2
[9] LVL_HPI_D[6] 35 2A1
[9] LVL_HPI_D[7] 36 2A0
[9] LVL_HPI_D[8] 37 1A7
[9] LVL_HPI_D[9] 38 1A6
[9] LVL_HPI_D[10] 40 1A5
[9] LVL_HPI_D[11] 41 1A4
[9] LVL_HPI_D[12] 43 1A3
[9] LVL_HPI_D[13] 44 1A2
[9] LVL_HPI_D[14] 46 1A1
[9] LVL_HPI_D[15] 47 1A0
2B7 23 HPI_D[0]/SPI_RX [2,6]
2B6 22 HPI_D[1]/SPI_TX [2,6]
2B5 20 HPI_D[2]/GP[12] [2,6]
2B4 19 HPI_D[3]/GP[13] [2,6]
2B3 17 HPI_D[4]/GP[14] [2,6]
2B2 16 HPI_D[5]/GP[15] [2,6]
2B1 14 HPI_D[6]/GP[16] [2,6]
2B0 13 HPI_D[7]/GP[17] [2,6]
1B7 12 HPI_D[8]/I2S2_CLK/GP[18]/SPI_CLK [2,5]
1B6 11 HPI_D[9]/I2S2_FS/GP[19]/ SPI_CS0 [2,5]
1B5 9 HPI_D[10]/I2S2_RX/GP[20]/SPI_RX [2,5]
1B4 8 HPI_D[11]/I2S2_DX/GP[27]/SPI_TX [2,5]
1B3 6 HPI_D[12]/UART_RTS/GP[28]/I2S3_CLK [2,6]
1B2 5 HPI_D[13]/UART_CTS/GP[29]/I2S3_FS [2,6]
1B1 3 HPI_D[14]/UART_RX/GP[30]/I2S3_RX [2,6]
1B0 2 HPI_D[15]/UART_DX/GP[31]/I2S3_DX [2,6]
28 GND.1
34 GND.2
39 GND.3
45 GND.4
4 GND.5
10 GND.6
15 GND.7
21 GND.8
SN74AVC16T245DGG
C205 0.1uF
C52 0.1uF
3V3_MSP430
VDD_IO1
U33
7 VCCA
6 VCCB
[9] LVL_HPI_HINT 8 A1
[9] LVL_HPI_HRDY 9 A2
B1 5 HPI_HINT/SPI0_CLK [2,6]
B2 4 HPI_HRDY/SPI_CS3 [2]
R270 0
10 DIR1
1 DIR2
2 OEN
GND 3
SN74AVC2T245RSWR
C136 0.1uF
C137 0.1uF
3V3_MSP430
VDD_IO1
U15
SN74AVC4T245
1 VCCA
VCCB 16
[9] LVL_HPI_HCNTL0 4 1A1
[9] LVL_HPI_HNCTL1 5 1A2
1B1 13 HPI_HCNTL0/SPI_CS0 [2,6]
1B2 12 HPI_HNCTL1/SPI_CS1 [2,6]
6 2A1
7 2A2
2B1 11 HPI_HR_NW/SPI_CS2 [2]
2B2 10
3V3_MSP430
R173 0
R174 0
2 1DIR
15 1OEn
3 2DIR
14 2OEn
GND.1 8
GND.2 9

DIR AND OEn ARE ON A POWER DOMAIN

OEn	DIR	FUNCTION
L	L	B->A
L	H	B<-A

SPECTRUM DIGITAL INCORPORATED			
Title:	TMS320C5517 EVALUATION MODULE		
Page Contents:	HPI LEVEL TRANSLATORS		
Size:B	DWG NO 514662-0001		Revision: A
Date:	Friday, January 03, 2014	Sheet 10 of 39	

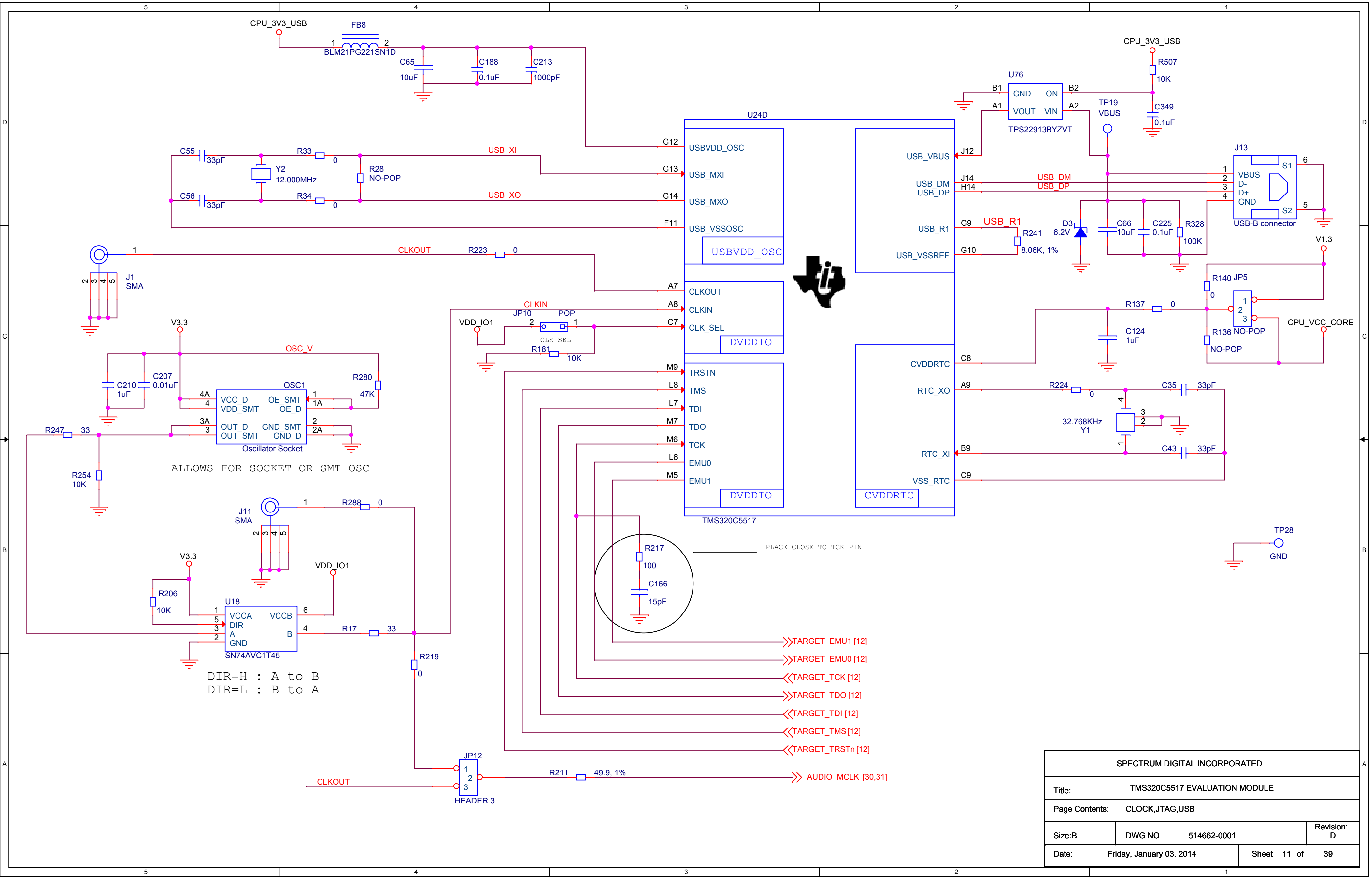

CPU_3V3_USB
FB8
BLM21PG221SN1D
C65 10uF
C188 0.1uF
C213 1000pF
U24D
USBVDD_OSC
USB_MXI
USB_MXO
USB_VSSOSC
USBVDD_OSC
G12
G13
G14
F11
C55 33pF
C56 33pF
Y2 12.000MHz
R33 0
R34 0
R28 NO-POP
USB_XI
USB_XO
J1 SMA
CLKOUT
R223 0
A7
A8
C7
CLKOUT
CLKIN
CLK_SEL
DVDDIO
CLKIN
JP10 POP
CLK_SEL
VDD_IO1
R181 10K
V3.3
OSC_V
C210 1uF
C207 0.01uF
R280 47K
OSC1
VCC_D
VDD_SMT
OUT_D
OUT_SMT
OE_SMT
OE_D
GND_SMT
GND_D
Oscillator Socket
4A
1A
3A
2A
R247 33
R254 10K
ALLOWS FOR SOCKET OR SMT OSC
J11 SMA
R288 0
V3.3
VDD_IO1
R206 10K
U18
VCCA
DIR
A
GND
VCCB
B
SN74AVC1T45
R17 33
R219 0
DIR=H : A to B
DIR=L : B to A
M9
L8
L7
M7
M6
L6
M5
TRSTN
TMS
TDI
TDO
TCK
EMU0
EMU1
DVDDIO
TMS320C5517
R217 100
C166 15pF
PLACE CLOSE TO TCK PIN
TARGET_EMU1 [12]
TARGET_EMU0 [12]
TARGET_TCK [12]
TARGET_TDO [12]
TARGET_TDI [12]
TARGET_TMS [12]
TARGET_TRSTn [12]
JP12
HEADER 3
CLKOUT
R211 49.9, 1%
AUDIO_MCLK [30,31]
U76
GND
ON
VOUT
VIN
B1
B2
A1
A2
TPS22913BYZVT
CPU_3V3_USB
R507 10K
C349 0.1uF
TP19 VBUS
USB_VBUS
USB_DM
USB_DP
USB_R1
USB_VSSREF
J12
J14
H14
G9
G10
USB_DM
USB_DP
USB_R1
R241 8.06K, 1%
D3 6.2V
C66 10uF
C225 0.1uF
R328 100K
J13
VBUS
D-
D+
GND
S1
S2
USB-B connector
V1.3
R140 0
JP5
R137 0
C124 1uF
R136 NO-POP
NO-POP
CPU_VCC_CORE
CVDDRTC
RTC_XO
RTC_XI
VSS_RTC
CVDDRTC
C8
A9
B9
C9
R224 0
C35 33pF
C43 33pF
32.768KHz
Y1
TP28
GND

SPECTRUM DIGITAL INCORPORATED		
Title:	TMS320C5517 EVALUATION MODULE	
Page Contents:	CLOCK,JTAG,USB	
Size:B	DWG NO 514662-0001	Revision: D
Date:	Friday, January 03, 2014	Sheet 11 of 39

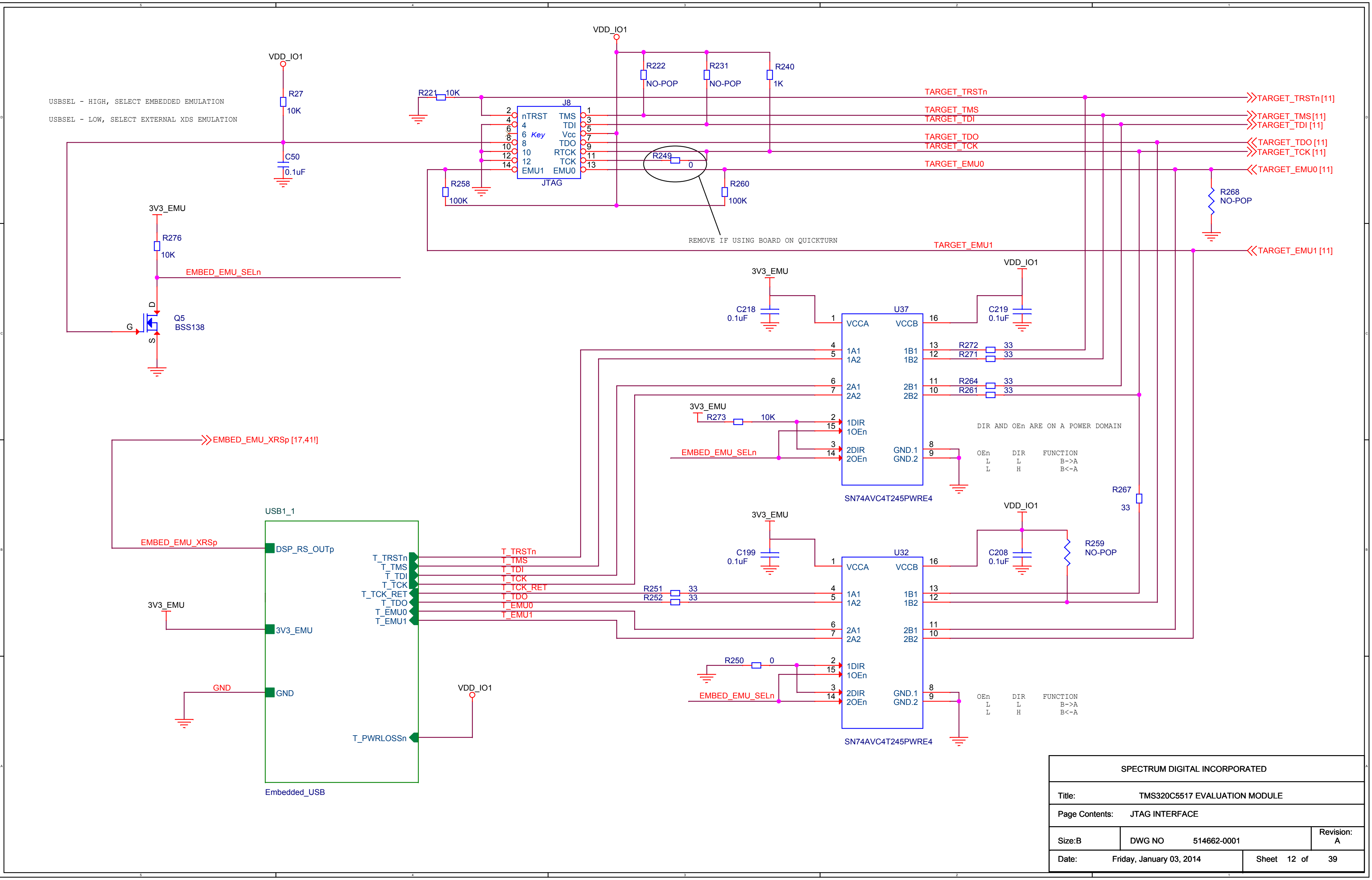
USBSEL - HIGH, SELECT EMBEDDED EMULATION
USBSEL - LOW, SELECT EXTERNAL XDS EMULATION
VDD_IO1
R27
10K
C50
0.1uF
3V3_EMU
R276
10K
EMBED_EMU_SELn
Q5
BSS138
G
D
S
R221
10K
J8
JTAG
nTRST
TMS
TDI
Key
Vcc
TDO
RTCK
TCK
EMU1
EMU0
R222
NO-POP
R231
NO-POP
R240
1K
R249
0
R258
100K
R260
100K
REMOVE IF USING BOARD ON QUICKTURN
TARGET_TRSTn
TARGET_TMS
TARGET_TDI
TARGET_TDO
TARGET_TCK
TARGET_EMU0
TARGET_EMU1
TARGET_TRSTn [11]
TARGET_TMS [11]
TARGET_TDI [11]
TARGET_TDO [11]
TARGET_TCK [11]
TARGET_EMU0 [11]
TARGET_EMU1 [11]
R268
NO-POP
C218
0.1uF
C219
0.1uF
U37
VCCA
VCCB
1A1
1A2
1B1
1B2
2A1
2A2
2B1
2B2
1DIR
1OEn
2DIR
2OEn
GND.1
GND.2
R272
R271
R264
R261
33
R273
10K
SN74AVC4T245PWRE4
DIR AND OEn ARE ON A POWER DOMAIN
OEn DIR FUNCTION
L L B->A
L H B<-A
R267
33
EMBED_EMU_XRSp [17,41!]
EMBED_EMU_XRSp
USB1_1
DSP_RS_OUTp
T_TRSTn
T_TMS
T_TDI
T_TCK
T_TCK_RET
T_TDO
T_EMU0
T_EMU1
3V3_EMU
GND
T_PWRLOSSn
Embedded_USB
C199
0.1uF
C208
0.1uF
U32
R259
NO-POP
R251
R252
R250
0

SPECTRUM DIGITAL INCORPORATED

Title: TMS320C5517 EVALUATION MODULE

Page Contents: JTAG INTERFACE

Size:B DWG NO 514662-0001 Revision: A

Date: Friday, January 03, 2014 Sheet 12 of 39

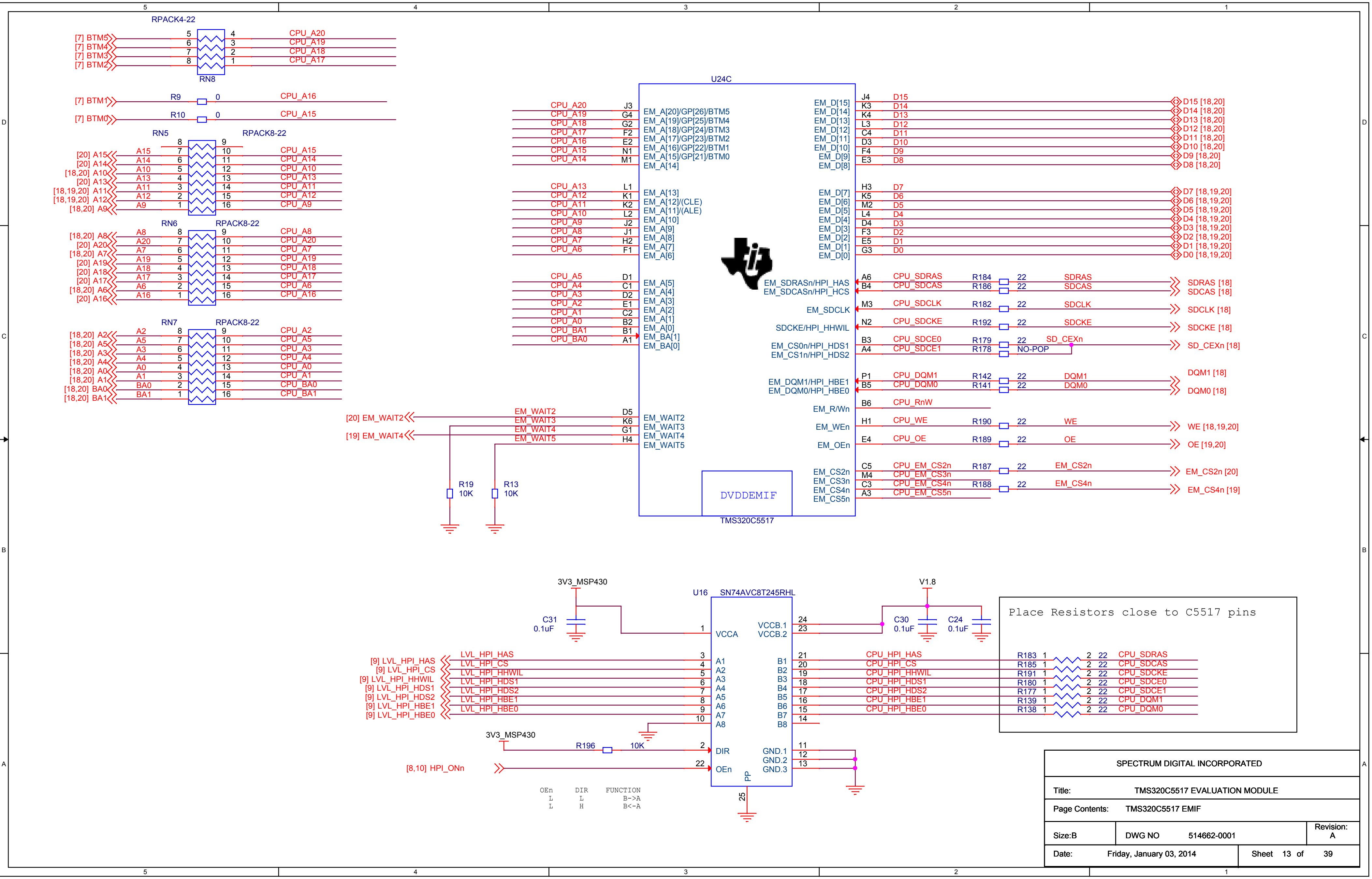
5
4
3
2
1
D
C
B
A
RPACK4-22
RN8
[7] BTM5 5 4 CPU_A20
[7] BTM4 6 3 CPU_A19
[7] BTM3 7 2 CPU_A18
[7] BTM2 8 1 CPU_A17
[7] BTM1 R9 0 CPU_A16
[7] BTM0 R10 0 CPU_A15
RN5 RPACK8-22
[20] A15 A15 8 7 9 10 CPU_A15
[20] A14 A14 6 11 CPU_A14
[18,20] A10 A10 5 12 CPU_A10
[20] A13 A13 4 13 CPU_A13
[18,19,20] A11 A11 3 14 CPU_A11
[18,19,20] A12 A12 2 15 CPU_A12
[18,20] A9 A9 1 16 CPU_A9
RN6 RPACK8-22
[18,20] A8 A8 8 9 CPU_A8
[20] A20 A20 7 10 CPU_A20
[18,20] A7 A7 6 11 CPU_A7
[20] A19 A19 5 12 CPU_A19
[20] A18 A18 4 13 CPU_A18
[20] A17 A17 3 14 CPU_A17
[18,20] A6 A6 2 15 CPU_A6
[20] A16 A16 1 16 CPU_A16
RN7 RPACK8-22
[18,20] A2 A2 8 9 CPU_A2
[18,20] A5 A5 7 10 CPU_A5
[18,20] A3 A3 6 11 CPU_A3
[18,20] A4 A4 5 12 CPU_A4
[18,20] A0 A0 4 13 CPU_A0
[18,20] A1 A1 3 14 CPU_A1
[18,20] BA0 BA0 2 15 CPU_BA0
[18,20] BA1 BA1 1 16 CPU_BA1
[20] EM_WAIT2
[19] EM_WAIT4
R19 10K
R13 10K
U24C
CPU_A20 J3 EM_A[20]/GP[26]/BTM5
CPU_A19 G4 EM_A[19]/GP[25]/BTM4
CPU_A18 G2 EM_A[18]/GP[24]/BTM3
CPU_A17 F2 EM_A[17]/GP[23]/BTM2
CPU_A16 E2 EM_A[16]/GP[22]/BTM1
CPU_A15 N1 EM_A[15]/GP[21]/BTM0
CPU_A14 M1 EM_A[14]
CPU_A13 L1 EM_A[13]
CPU_A12 K1 EM_A[12]/(CLE)
CPU_A11 K2 EM_A[11]/(ALE)
CPU_A10 L2 EM_A[10]
CPU_A9 J2 EM_A[9]
CPU_A8 J1 EM_A[8]
CPU_A7 H2 EM_A[7]
CPU_A6 F1 EM_A[6]
CPU_A5 D1 EM_A[5]
CPU_A4 C1 EM_A[4]
CPU_A3 D2 EM_A[3]
CPU_A2 E1 EM_A[2]
CPU_A1 C2 EM_A[1]
CPU_A0 B2 EM_A[0]
CPU_BA1 B1 EM_BA[1]
CPU_BA0 A1 EM_BA[0]
EM_WAIT2 D5 EM_WAIT2
EM_WAIT3 K6 EM_WAIT3
EM_WAIT4 G1 EM_WAIT4
EM_WAIT5 H4 EM_WAIT5
DVDDEMIF
TMS320C5517
EM_D[15] J4 D15 D15 [18,20]
EM_D[14] K3 D14 D14 [18,20]
EM_D[13] K4 D13 D13 [18,20]
EM_D[12] L3 D12 D12 [18,20]
EM_D[11] C4 D11 D11 [18,20]
EM_D[10] D3 D10 D10 [18,20]
EM_D[9] F4 D9 D9 [18,20]
EM_D[8] E3 D8 D8 [18,20]
EM_D[7] H3 D7 D7 [18,19,20]
EM_D[6] K5 D6 D6 [18,19,20]
EM_D[5] M2 D5 D5 [18,19,20]
EM_D[4] L4 D4 D4 [18,19,20]
EM_D[3] D4 D3 D3 [18,19,20]
EM_D[2] F3 D2 D2 [18,19,20]
EM_D[1] E5 D1 D1 [18,19,20]
EM_D[0] G3 D0 D0 [18,19,20]
EM_SDRASn/HPI_HAS A6 CPU_SDRAS R184 22 SDRAS SDRAS [18]
EM_SDCASn/HPI_HCS B4 CPU_SDCAS R186 22 SDCAS SDCAS [18]
EM_SDCLK M3 CPU_SDCLK R182 22 SDCLK SDCLK [18]
SDCKE/HPI_HHWIL N2 CPU_SDCKE R192 22 SDCKE SDCKE [18]
EM_CS0n/HPI_HDS1 B3 CPU_SDCE0 R179 22 SD_CEXn SD_CEXn [18]
EM_CS1n/HPI_HDS2 A4 CPU_SDCE1 R178 NO-POP
EM_DQM1/HPI_HBE1 P1 CPU_DQM1 R142 22 DQM1 DQM1 [18]
EM_DQM0/HPI_HBE0 B5 CPU_DQM0 R141 22 DQM0 DQM0 [18]
EM_R/Wn B6 CPU_RnW
EM_WEn H1 CPU_WE R190 22 WE WE [18,19,20]
EM_OEn E4 CPU_OE R189 22 OE OE [19,20]
EM_CS2n C5 CPU_EM_CS2n R187 22 EM_CS2n EM_CS2n [20]
EM_CS3n M4 CPU_EM_CS3n
EM_CS4n C3 CPU_EM_CS4n R188 22 EM_CS4n EM_CS4n [19]
EM_CS5n A3 CPU_EM_CS5n
3V3_MSP430
C31 0.1uF
U16 SN74AVC8T245RHL
1 VCCA
VCCB.1 24
VCCB.2 23
V1.8
C30 0.1uF
C24 0.1uF
[9] LVL_HPI_HAS LVL_HPI_HAS 3 A1 B1 21 CPU_HPI_HAS
[9] LVL_HPI_CS LVL_HPI_CS 4 A2 B2 20 CPU_HPI_CS
[9] LVL_HPI_HHWIL LVL_HPI_HHWIL 5 A3 B3 19 CPU_HPI_HHWIL
[9] LVL_HPI_HDS1 LVL_HPI_HDS1 6 A4 B4 18 CPU_HPI_HDS1
[9] LVL_HPI_HDS2 LVL_HPI_HDS2 7 A5 B5 17 CPU_HPI_HDS2
[9] LVL_HPI_HBE1 LVL_HPI_HBE1 8 A6 B6 16 CPU_HPI_HBE1
[9] LVL_HPI_HBE0 LVL_HPI_HBE0 9 A7 B7 15 CPU_HPI_HBE0
10 A8 B8 14
3V3_MSP430
R196 10K 2 DIR
[8,10] HPI_ONn 22 OEn
GND.1 11
GND.2 12
GND.3 13
PP
25
OEn DIR FUNCTION
L L B->A
L H B<-A
Place Resistors close to C5517 pins
R183 1 2 22 CPU_SDRAS
R185 1 2 22 CPU_SDCAS
R191 1 2 22 CPU_SDCKE
R180 1 2 22 CPU_SDCE0
R177 1 2 22 CPU_SDCE1
R139 1 2 22 CPU_DQM1
R138 1 2 22 CPU_DQM0

SPECTRUM DIGITAL INCORPORATED

Title: TMS320C5517 EVALUATION MODULE

Page Contents: TMS320C5517 EMIF

Size:B	DWG NO 514662-0001	Revision: A
Date: Friday, January 03, 2014	Sheet 13 of 39	

NOTE: DIMENSIONS AND LOCATIONS OF THESE CONNECTORS MUST MEET SPECIFICATION FOR INTERFACE MODULES

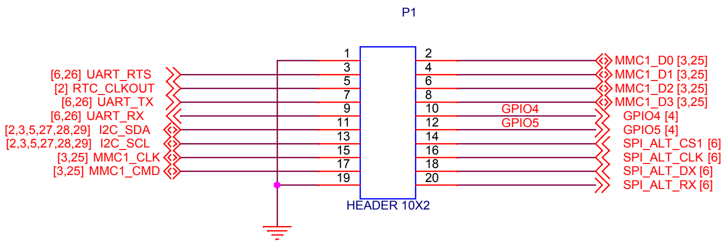
P1
[6,26] UART_RTS
[2] RTC_CLKOUT
[6,26] UART_TX
[6,26] UART_RX
[2,3,5,27,28,29] I2C_SDA
[2,3,5,27,28,29] I2C_SCL
[3,25] MMC1_CLK
[3,25] MMC1_CMD
1
3
5
7
9
11
13
15
17
19
2
4
6
8
10
12
14
16
18
20
GPIO4
GPIO5
MMC1_D0 [3,25]
MMC1_D1 [3,25]
MMC1_D2 [3,25]
MMC1_D3 [3,25]
GPIO4 [4]
GPIO5 [4]
SPI_ALT_CS1 [6]
SPI_ALT_CLK [6]
SPI_ALT_DX [6]
SPI_ALT_RX [6]
HEADER 10X2

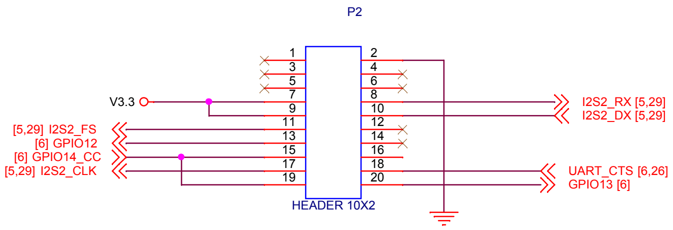
P2
V3.3
[5,29] I2S2_FS
[6] GPIO12
[6] GPIO14_CC
[5,29] I2S2_CLK
1
3
5
7
9
11
13
15
17
19
2
4
6
8
10
12
14
16
18
20
I2S2_RX [5,29]
I2S2_DX [5,29]
UART_CTS [6,26]
GPIO13 [6]
HEADER 10X2

SPECTRUM DIGITAL INCORPORATED		
Title: TMS320C5517 EVALUATION MODULE		
Page Contents: CC BOARD INTERFACE		
Size:B	DWG NO 514662-0001	Revision: A
Date: Friday, January 03, 2014		Sheet 14 of 39

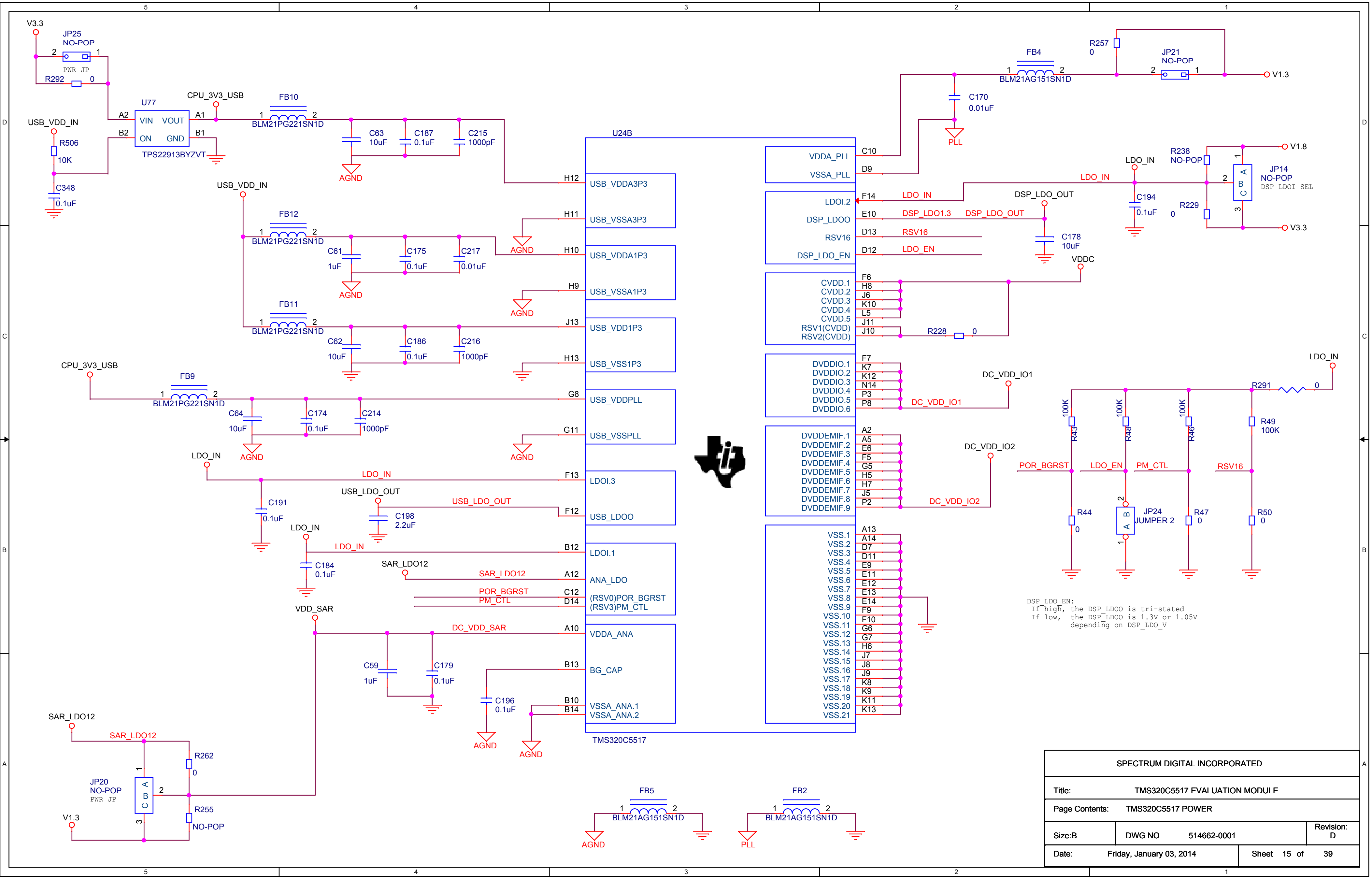
5
4
3
2
1
D
C
B
A
V3.3
JP25
NO-POP
PWR JP
R292
0
CPU_3V3_USB
FB10
BLM21PG221SN1D
U77
VIN
VOUT
ON
GND
A2
A1
B2
B1
TPS22913BYZVT
USB_VDD_IN
R506
10K
C348
0.1uF
C63
10uF
C187
0.1uF
C215
1000pF
AGND
U24B
USB_VDD_IN
FB12
BLM21PG221SN1D
C61
1uF
C175
0.1uF
C217
0.01uF
FB11
BLM21PG221SN1D
C62
10uF
C186
0.1uF
C216
1000pF
CPU_3V3_USB
FB9
BLM21PG221SN1D
C64
10uF
C174
0.1uF
C214
1000pF
H12
USB_VDDA3P3
H11
USB_VSSA3P3
H10
USB_VDDA1P3
H9
USB_VSSA1P3
J13
USB_VDD1P3
H13
USB_VSS1P3
G8
USB_VDDPLL
G11
USB_VSSPLL
LDO_IN
C191
0.1uF
F13
LDOI.3
USB_LDO_OUT
C198
2.2uF
F12
USB_LDOO
LDO_IN
C184
0.1uF
B12
LDOI.1
SAR_LDO12
A12
ANA_LDO
POR_BGRST
PM_CTL
C12
D14
(RSV0)POR_BGRST
(RSV3)PM_CTL
VDD_SAR
DC_VDD_SAR
A10
VDDA_ANA
C59
1uF
C179
0.1uF
B13
BG_CAP
C196
0.1uF
B10
B14
VSSA_ANA.1
VSSA_ANA.2
TMS320C5517
SAR_LDO12
JP20
NO-POP
PWR JP
R262
0
R255
NO-POP
V1.3
FB5
BLM21AG151SN1D
FB2
BLM21AG151SN1D
PLL
FB4
BLM21AG151SN1D
R257
0
JP21
NO-POP
V1.3
C170
0.01uF
VDDA_PLL
VSSA_PLL
C10
D9
LDOI.2
DSP_LDOO
RSV16
DSP_LDO_EN
F14
E10
D13
D12
LDO_IN
DSP_LDO1.3
DSP_LDO_OUT
LDO_EN
C194
0.1uF
C178
10uF
R238
NO-POP
R229
0
JP14
NO-POP
DSP LDOI SEL
V1.8
V3.3
VDDC
CVDD.1
CVDD.2
CVDD.3
CVDD.4
CVDD.5
RSV1(CVDD)
RSV2(CVDD)
F6
H8
J6
K10
L5
J11
J10
R228
DVDDIO.1
DVDDIO.2
DVDDIO.3
DVDDIO.4
DVDDIO.5
DVDDIO.6
F7
K7
K12
N14
P3
P8
DC_VDD_IO1
DVDDEMIF.1
DVDDEMIF.2
DVDDEMIF.3
DVDDEMIF.4
DVDDEMIF.5
DVDDEMIF.6
DVDDEMIF.7
DVDDEMIF.8
DVDDEMIF.9
A2
A5
E6
F5
G5
H5
H7
J5
P2
DC_VDD_IO2
VSS.1
VSS.2
VSS.3
VSS.4
VSS.5
VSS.6
VSS.7
VSS.8
VSS.9
VSS.10
VSS.11
VSS.12
VSS.13
VSS.14
VSS.15
VSS.16
VSS.17
VSS.18
VSS.19
VSS.20
VSS.21
A13
A14
D7
D11
E9
E11
E12
E13
E14
F9
F10
G6
G7
H6
J7
J8
J9
K8
K9
K11
K13
LDO_IN
R291
100K
R43
R48
R46
R49
100K
POR_BGRST
LDO_EN
PM_CTL
RSV16
R44
0
JP24
JUMPER 2
R47
0
R50
0

DSP_LDO_EN:
If high, the DSP_LDOO is tri-stated
If low, the DSP_LDOO is 1.3V or 1.05V
depending on DSP_LDO_V

SPECTRUM DIGITAL INCORPORATED

Title:	TMS320C5517 EVALUATION MODULE
Page Contents:	TMS320C5517 POWER
Size:B	DWG NO 514662-0001
Revision:	D
Date:	Friday, January 03, 2014
Sheet	15 of 39

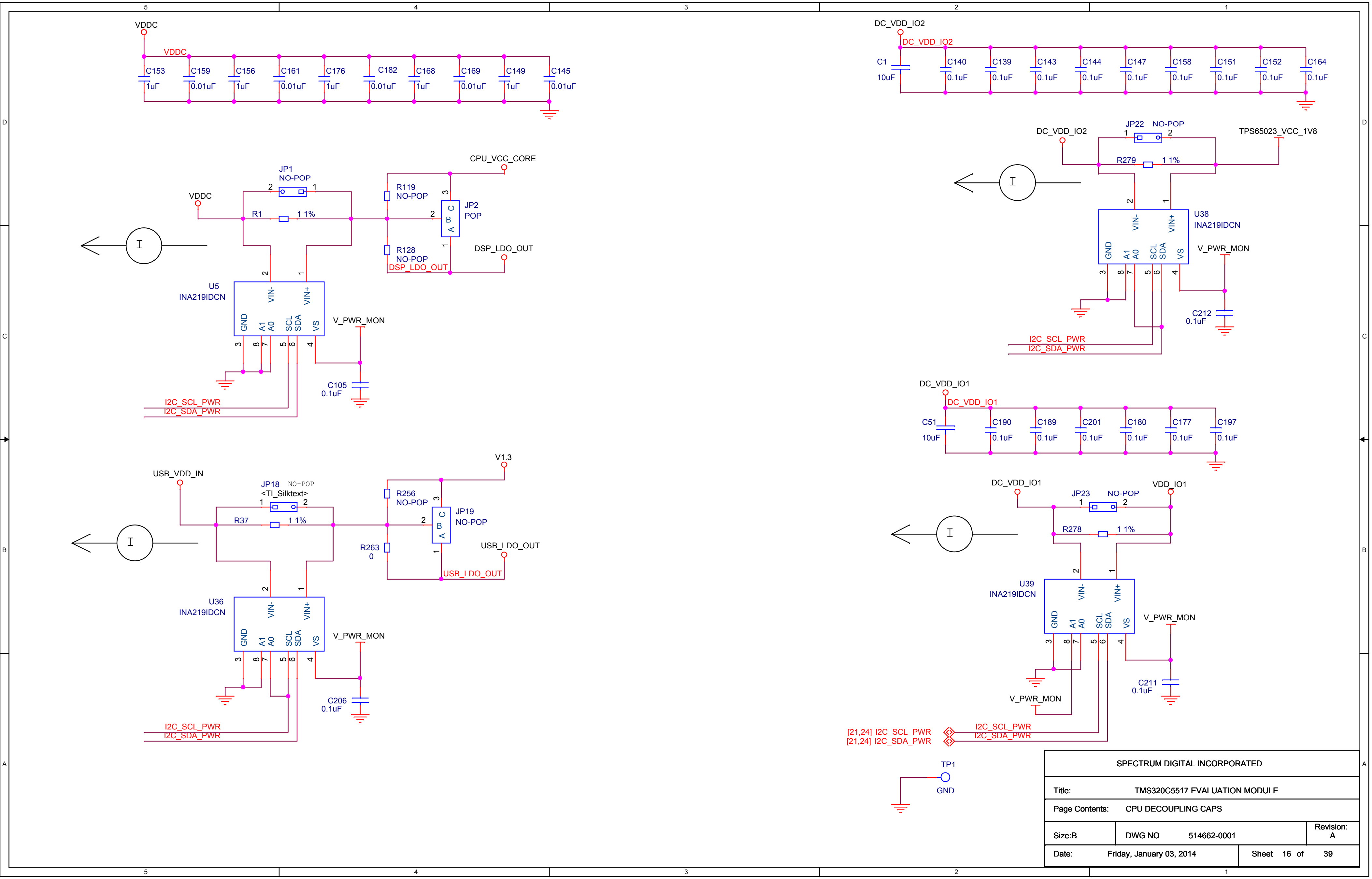
5
4
3
2
1
D
C
B
A
VDDC
VDDC
C153
1uF
C159
0.01uF
C156
1uF
C161
0.01uF
C176
1uF
C182
0.01uF
C168
1uF
C169
0.01uF
C149
1uF
C145
0.01uF
DC_VDD_IO2
DC_VDD_IO2
C1
10uF
C140
0.1uF
C139
0.1uF
C143
0.1uF
C144
0.1uF
C147
0.1uF
C158
0.1uF
C151
0.1uF
C152
0.1uF
C164
0.1uF
DC_VDD_IO2
JP22 NO-POP
1
2
TPS65023_VCC_1V8
R279
1 1%
I
2
1
U38
INA219IDCN
VIN-
VIN+
GND
A1
A0
SCL
SDA
VS
3
8
7
5
6
4
V_PWR_MON
C212
0.1uF
I2C_SCL_PWR
I2C_SDA_PWR
CPU_VCC_CORE
JP1
NO-POP
2
1
VDDC
R1
1 1%
R119
NO-POP
3
JP2
POP
C
B
A
2
1
R128
NO-POP
DSP_LDO_OUT
DSP_LDO_OUT
I
U5
INA219IDCN
VIN-
VIN+
GND
A1
A0
SCL
SDA
VS
3
8
7
5
6
4
V_PWR_MON
C105
0.1uF
I2C_SCL_PWR
I2C_SDA_PWR
DC_VDD_IO1
DC_VDD_IO1
C51
10uF
C190
0.1uF
C189
0.1uF
C201
0.1uF
C180
0.1uF
C177
0.1uF
C197
0.1uF
V1.3
USB_VDD_IN
JP18 NO-POP
<TI_Silktext>
1
2
R37
1 1%
R256
NO-POP
3
JP19
NO-POP
C
B
A
2
1
R263
0
USB_LDO_OUT
USB_LDO_OUT
I
U36
INA219IDCN
VIN-
VIN+
GND
A1
A0
SCL
SDA
VS
3
8
7
5
6
4
V_PWR_MON
C206
0.1uF
I2C_SCL_PWR
I2C_SDA_PWR
DC_VDD_IO1
JP23
NO-POP
1
2
VDD_IO1
R278
1 1%
I
U39
INA219IDCN
VIN-
VIN+
GND
A1
A0
SCL
SDA
VS
3
8
7
5
6
4
V_PWR_MON
C211
0.1uF
V_PWR_MON
[21,24] I2C_SCL_PWR
[21,24] I2C_SDA_PWR
I2C_SCL_PWR
I2C_SDA_PWR
TP1
GND

SPECTRUM DIGITAL INCORPORATED

Title:	TMS320C5517 EVALUATION MODULE	
Page Contents:	CPU DECOUPLING CAPS	
Size:B	DWG NO 514662-0001	Revision: A
Date: Friday, January 03, 2014		Sheet 16 of 39

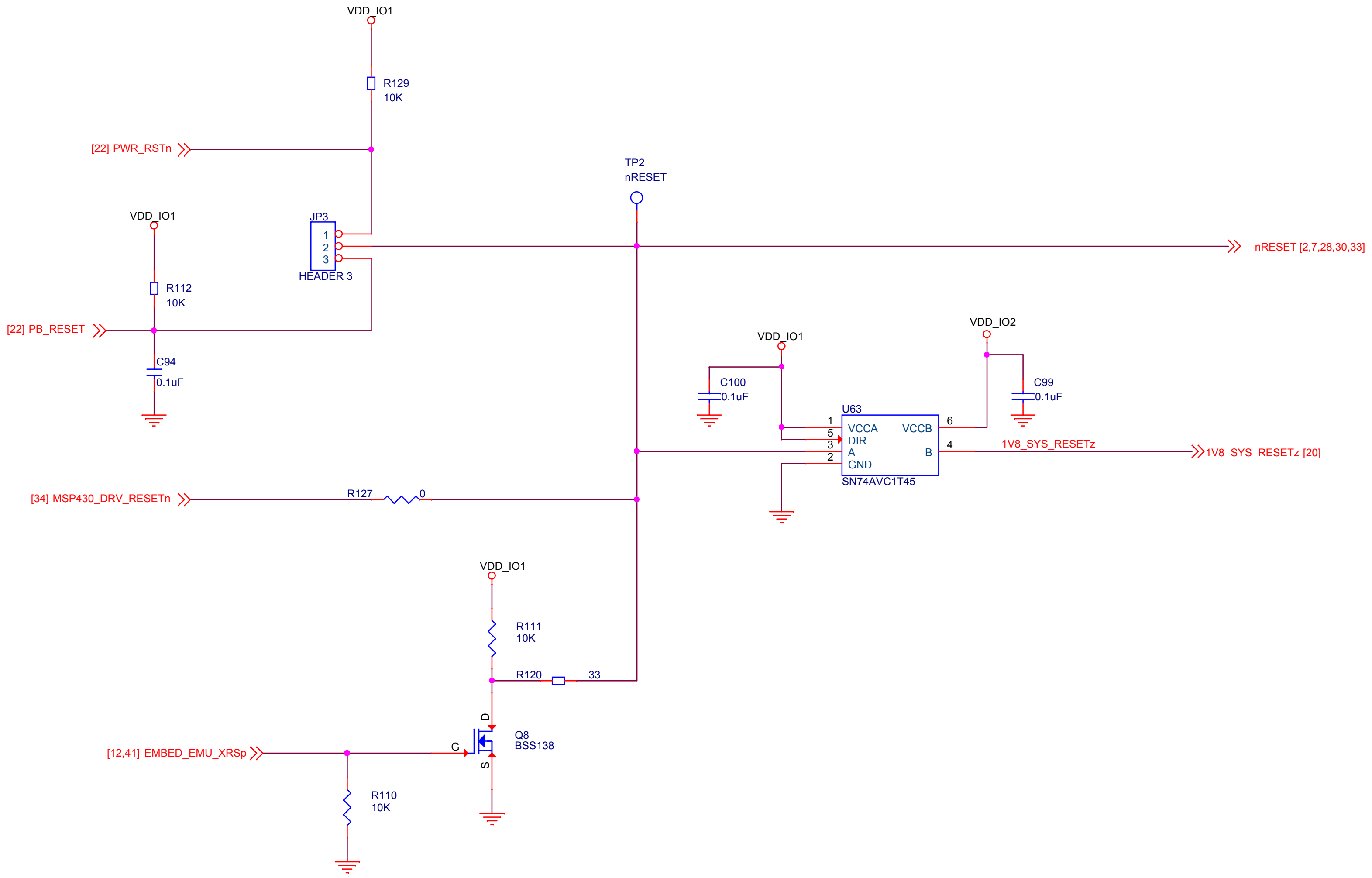
VDD_IO1
R129
10K
[22] PWR_RSTn
TP2
nRESET
VDD_IO1
JP3
1
2
3
HEADER 3
R112
10K
[22] PB_RESET
C94
0.1uF
nRESET [2,7,28,30,33]
VDD_IO1
VDD_IO2
C100
0.1uF
C99
0.1uF
U63
1
5
3
2
VCCA
DIR
A
GND
VCCB
B
6
4
SN74AVC1T45
1V8_SYS_RESETz
1V8_SYS_RESETz [20]
[34] MSP430_DRV_RESETn
R127
0
VDD_IO1
R111
10K
R120
33
D
G
S
Q8
BSS138
[12,41] EMBED_EMU_XRSp
R110
10K

SPECTRUM DIGITAL INCORPORATED

Title: TMS320C5517 EVALUATION MODULE

Page Contents: RESET

Size:B	DWG NO 514662-0001	Revision: B
Date: Friday, January 03, 2014	Sheet 17 of 39	

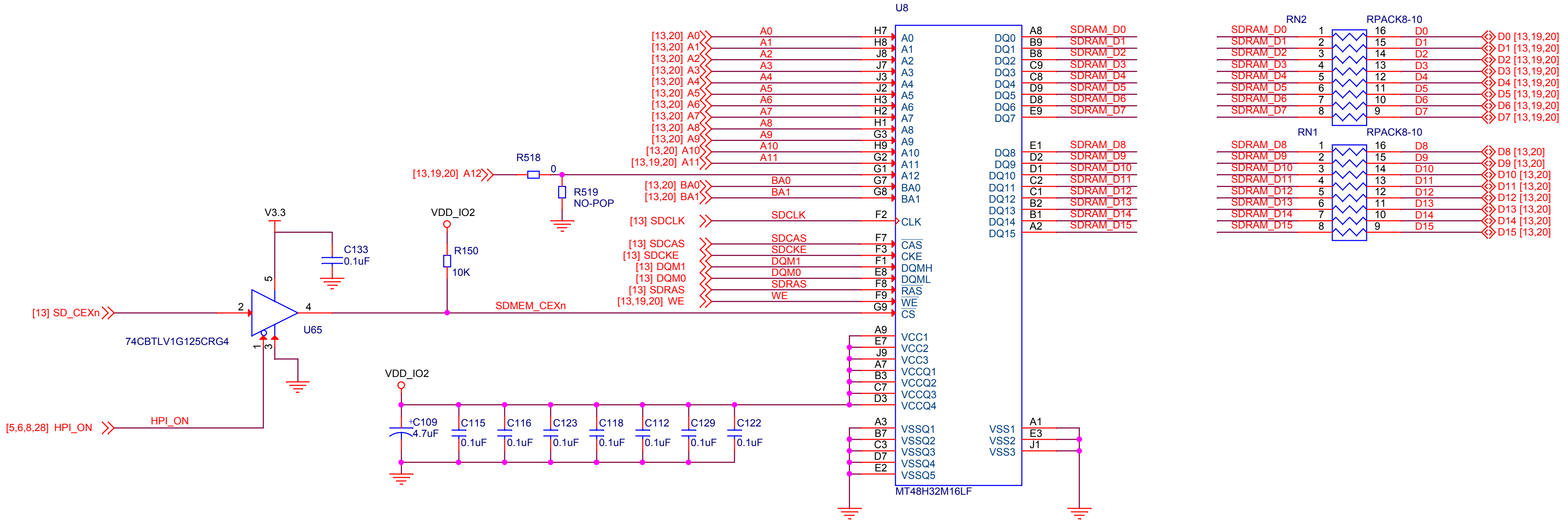

U8
MT48H32M16LF
A0 A1 A2 A3 A4 A5 A6 A7 A8 A9 A10 A11 A12 BA0 BA1
CLK
CAS
CKE
DQMH
DQML
RAS
WE
CS
H7 H8 J8 J7 J3 J2 H3 H2 H1 G3 H9 G2 G1 G7 G8 F2 F7 F3 F1 E8 F8 F9 G9
DQ0 DQ1 DQ2 DQ3 DQ4 DQ5 DQ6 DQ7 DQ8 DQ9 DQ10 DQ11 DQ12 DQ13 DQ14 DQ15
A8 B9 B8 C9 C8 D9 D8 E9 E1 D2 D1 C2 C1 B2 B1 A2
VCC1 VCC2 VCC3 VCCQ1 VCCQ2 VCCQ3 VCCQ4
A9 E7 J9 A7 B3 C7 D3
VSSQ1 VSSQ2 VSSQ3 VSSQ4 VSSQ5
A3 B7 C3 D7 E2
VSS1 VSS2 VSS3
A1 E3 J1
[13,20] A0
[13,20] A1
[13,20] A2
[13,20] A3
[13,20] A4
[13,20] A5
[13,20] A6
[13,20] A7
[13,20] A8
[13,20] A9
[13,20] A10
[13,19,20] A11
[13,19,20] A12
[13,20] BA0
[13,20] BA1
[13] SDCLK
[13] SDCAS
[13] SDCKE
[13] DQM1
[13] DQM0
[13] SDRAS
[13,19,20] WE
SDCLK
SDCAS
SDCKE
DQM1
DQM0
SDRAS
WE
R518
0
R519
NO-POP
V3.3
C133
0.1uF
VDD_IO2
R150
10K
[13] SD_CEXn
2
4
5
1
3
U65
74CBTLV1G125CRG4
SDMEM_CEXn
[5,6,8,28] HPI_ON
HPI_ON
VDD_IO2
C109
4.7uF
C115
0.1uF
C116
0.1uF
C123
0.1uF
C118
0.1uF
C112
0.1uF
C129
0.1uF
C122
0.1uF
SDRAM_D0 SDRAM_D1 SDRAM_D2 SDRAM_D3 SDRAM_D4 SDRAM_D5 SDRAM_D6 SDRAM_D7
SDRAM_D8 SDRAM_D9 SDRAM_D10 SDRAM_D11 SDRAM_D12 SDRAM_D13 SDRAM_D14 SDRAM_D15
RN2
RPACK8-10
RN1
RPACK8-10
1 2 3 4 5 6 7 8
16 15 14 13 12 11 10 9
D0 D1 D2 D3 D4 D5 D6 D7
D0 [13,19,20]
D1 [13,19,20]
D2 [13,19,20]
D3 [13,19,20]
D4 [13,19,20]
D5 [13,19,20]
D6 [13,19,20]
D7 [13,19,20]
D8 D9 D10 D11 D12 D13 D14 D15
D8 [13,20]
D9 [13,20]
D10 [13,20]
D11 [13,20]
D12 [13,20]
D13 [13,20]
D14 [13,20]
D15 [13,20]

SPECTRUM DIGITAL INCORPORATED

Title: TMS320C5517 EVALUATION MODULE

Page Contents: MOBILE SDRAM

Size:B	DWG NO 514662-0001	Revision: D
Date: Friday, January 03, 2014		Sheet 18 of 39

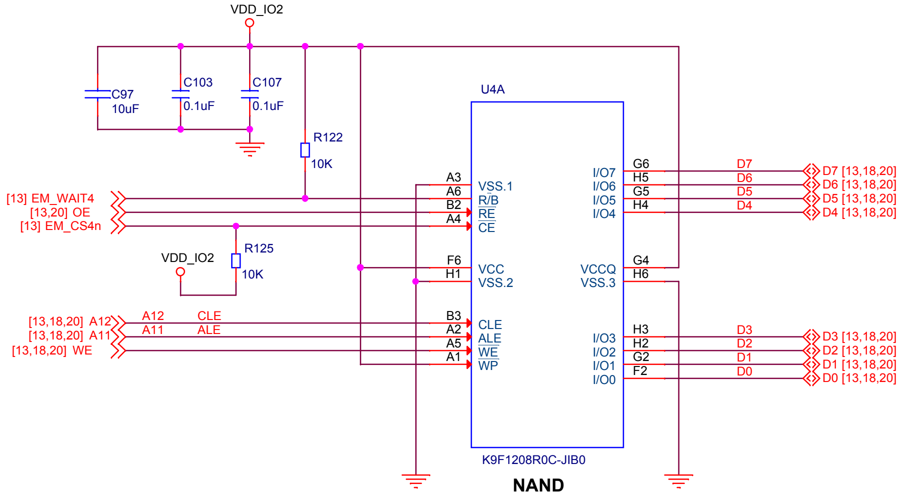
VDD_IO2
C97
10uF
C103
0.1uF
C107
0.1uF
R122
10K
U4A
[13] EM_WAIT4
[13,20] OE
[13] EM_CS4n
VDD_IO2
R125
10K
[13,18,20] A12
[13,18,20] A11
[13,18,20] WE
A12
A11
CLE
ALE
A3
A6
B2
A4
F6
H1
B3
A2
A5
A1
VSS.1
R/B
RE
CE
VCC
VSS.2
CLE
ALE
WE
WP
I/O7
I/O6
I/O5
I/O4
VCCQ
VSS.3
I/O3
I/O2
I/O1
I/O0
G6
H5
G5
H4
G4
H6
H3
H2
G2
F2
D7
D6
D5
D4
D3
D2
D1
D0
D7 [13,18,20]
D6 [13,18,20]
D5 [13,18,20]
D4 [13,18,20]
D3 [13,18,20]
D2 [13,18,20]
D1 [13,18,20]
D0 [13,18,20]
K9F1208R0C-JIB0
NAND

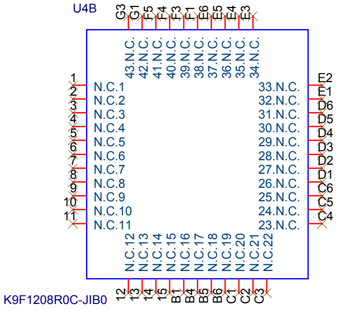
U4B
G3
G1
F5
F4
F3
F1
E6
E5
E4
E3
43.N.C.
42.N.C.
41.N.C.
40.N.C.
39.N.C.
38.N.C.
37.N.C.
36.N.C.
35.N.C.
34.N.C.
1
2
3
4
5
6
7
8
9
10
11
N.C.1
N.C.2
N.C.3
N.C.4
N.C.5
N.C.6
N.C.7
N.C.8
N.C.9
N.C.10
N.C.11
33.N.C.
32.N.C.
31.N.C.
30.N.C.
29.N.C.
28.N.C.
27.N.C.
26.N.C.
25.N.C.
24.N.C.
23.N.C.
E2
E1
D6
D5
D4
D3
D2
D1
C6
C5
C4
N.C.12
N.C.13
N.C.14
N.C.15
N.C.16
N.C.17
N.C.18
N.C.19
N.C.20
N.C.21
N.C.22
12
13
14
15
B1
B4
B5
B6
C1
C2
C3
K9F1208R0C-JIB0

SPECTRUM DIGITAL INCORPORATED

Title: TMS320C5517 EVALUATION MODULE

Page Contents: NAND FLASH

Size:B
DWG NO 514662-0001
Revision: A

Date: Friday, January 03, 2014
Sheet 19 of 39

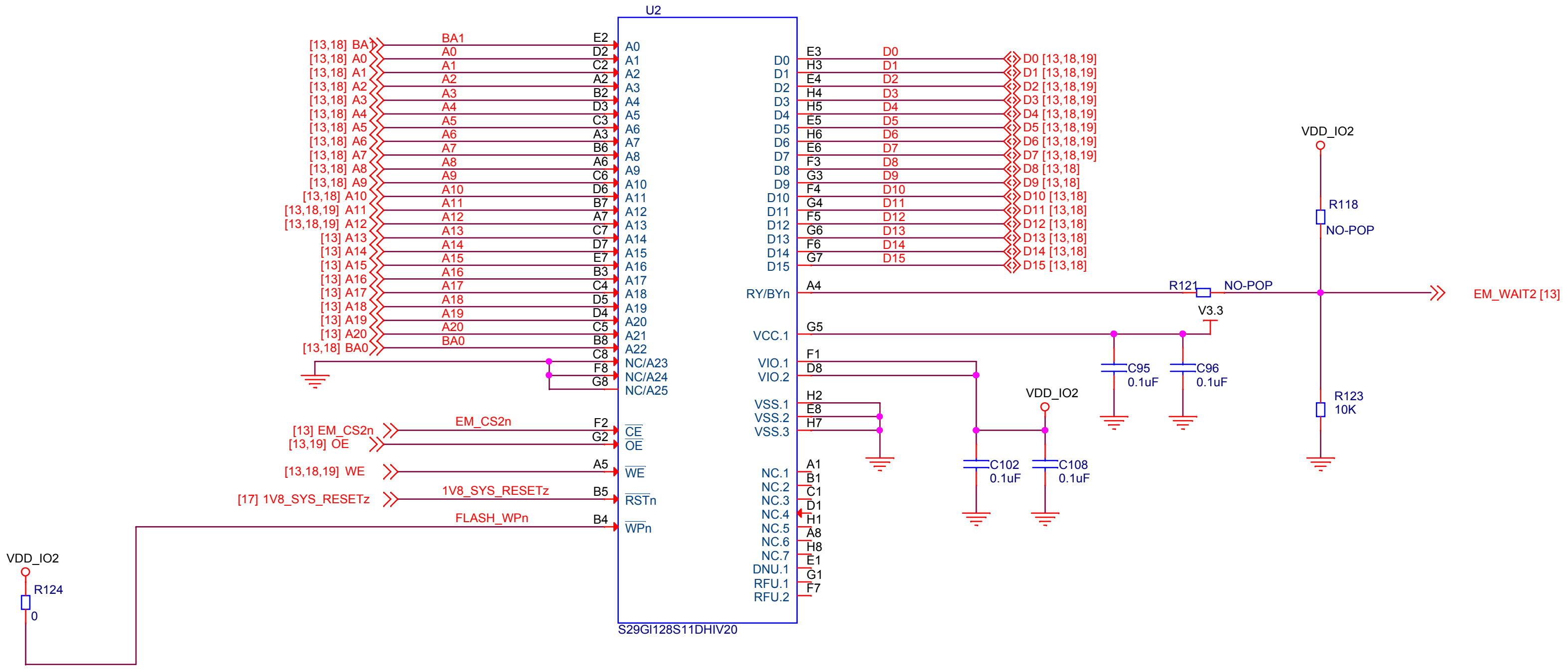
U2
S29GI128S11DHIV20
[13,18] BA1
[13,18] A0
[13,18] A1
[13,18] A2
[13,18] A3
[13,18] A4
[13,18] A5
[13,18] A6
[13,18] A7
[13,18] A8
[13,18] A9
[13,18] A10
[13,18,19] A11
[13,18,19] A12
[13] A13
[13] A14
[13] A15
[13] A16
[13] A17
[13] A18
[13] A19
[13] A20
[13,18] BA0
[13] EM_CS2n
[13,19] OE
[13,18,19] WE
[17] 1V8_SYS_RESETz
EM_CS2n
1V8_SYS_RESETz
FLASH_WPn
CE
OE
WE
RSTn
WPn
NC/A23
NC/A24
NC/A25
D0 [13,18,19]
D1 [13,18,19]
D2 [13,18,19]
D3 [13,18,19]
D4 [13,18,19]
D5 [13,18,19]
D6 [13,18,19]
D7 [13,18,19]
D8 [13,18]
D9 [13,18]
D10 [13,18]
D11 [13,18]
D12 [13,18]
D13 [13,18]
D14 [13,18]
D15 [13,18]
RY/BYn
VCC.1
VIO.1
VIO.2
VSS.1
VSS.2
VSS.3
NC.1
NC.2
NC.3
NC.4
NC.5
NC.6
NC.7
DNU.1
RFU.1
RFU.2
R121 NO-POP
EM_WAIT2 [13]
V3.3
VDD_IO2
R118 NO-POP
R123 10K
C95 0.1uF
C96 0.1uF
C102 0.1uF
C108 0.1uF
VDD_IO2
R124 0

SPECTRUM DIGITAL INCORPORATED

Title: TMS320C5517 EVALUATION MODULE

Page Contents: NOR FLASH

Size:B	DWG NO 514662-0001	Revision: A
Date: Friday, January 03, 2014	Sheet 20 of 39	

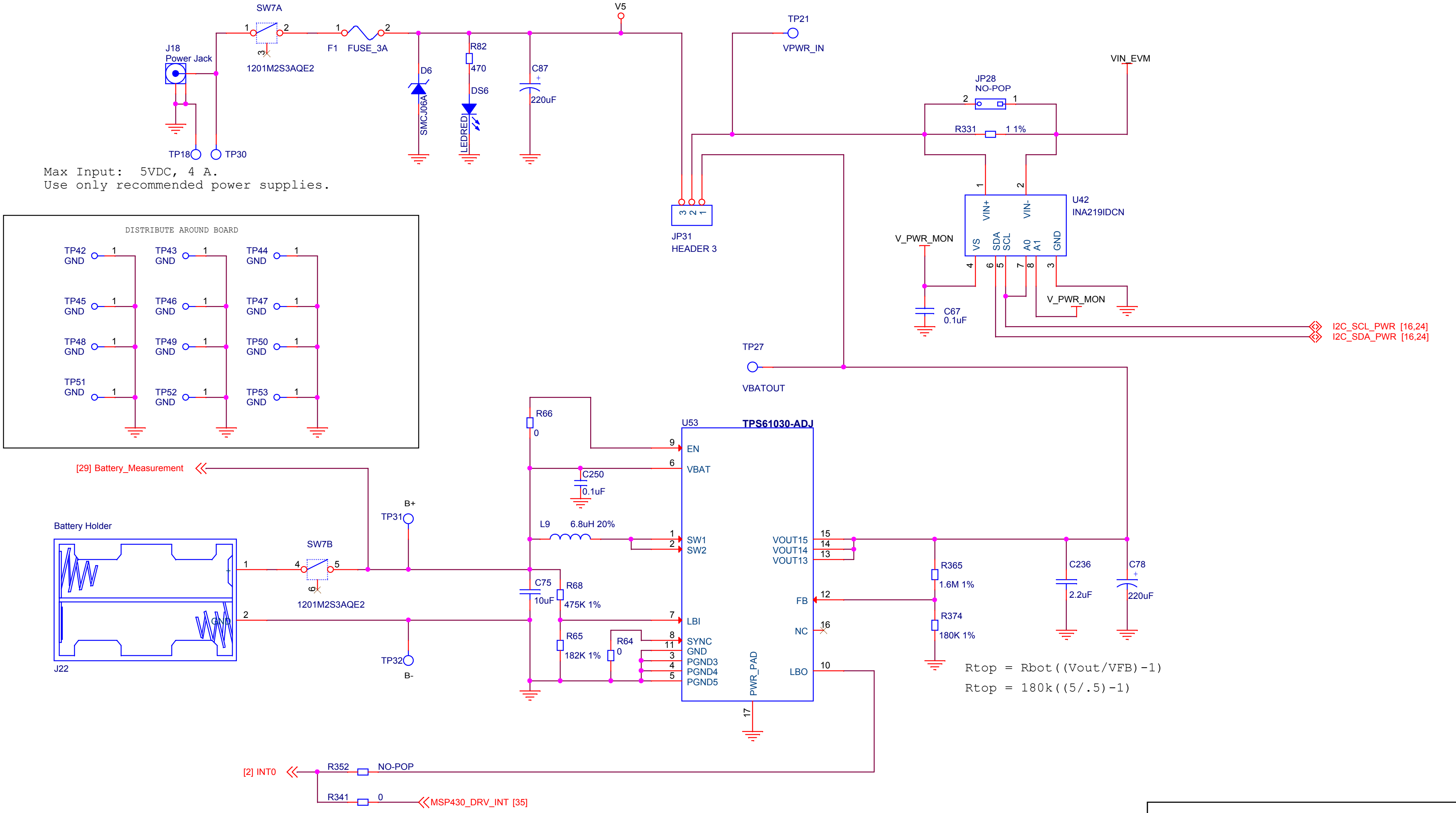
SW7A
1
2
3
1201M2S3AQE2
1
F1
FUSE_3A
2
J18
Power Jack
TP18
TP30
D6
SMCJ06A
R82
470
DS6
LEDRED
C87
220uF
V5
JP31
HEADER 3
3 2 1
TP21
VPWR_IN
VIN_EVM
JP28
NO-POP
2
1
R331
1 1%
U42
INA219IDCN
VIN+
VIN-
VS
SDA
SCL
A0
A1
GND
1
2
4
6
5
7
8
3
V_PWR_MON
C67
0.1uF
V_PWR_MON
I2C_SCL_PWR [16,24]
I2C_SDA_PWR [16,24]
DISTRIBUTE AROUND BOARD
TP42
GND
1
TP43
GND
1
TP44
GND
1
TP45
GND
1
TP46
GND
1
TP47
GND
1
TP48
GND
1
TP49
GND
1
TP50
GND
1
TP51
GND
1
TP52
GND
1
TP53
GND
1
TP27
VBATOUT
R66
0
U53
TPS61030-ADJ
9
EN
6
VBAT
C250
0.1uF
L9
6.8uH 20%
1
2
SW1
SW2
VOUT15
VOUT14
VOUT13
15
14
13
FB
12
NC
16
LBO
10
LBI
7
SYNC
GND
PGND3
PGND4
PGND5
8
11
3
4
5
PWR_PAD
17
R365
1.6M 1%
R374
180K 1%
C236
2.2uF
C78
220uF
C75
10uF
R68
475K 1%
R65
182K 1%
R64
0
[29] Battery_Measurement
B+
TP31
Battery Holder
J22
1
2
SW7B
4
5
6
1201M2S3AQE2
TP32
B-
[2] INT0
R352
NO-POP
R341
0
MSP430_DRV_INT [35]

Max Input: 5VDC, 4 A.
Use only recommended power supplies.

Rtop = Rbot((Vout/VFB)-1)
Rtop = 180k((5/.5)-1)

SPECTRUM DIGITAL INCORPORATED

Title:	TMS320C5517 EVALUATION MODULE		
Page Contents:	POWER IN		
Size:B	DWG NO 514662-0001		Revision: A
Date:	Friday, January 03, 2014	Sheet 21 of 39	

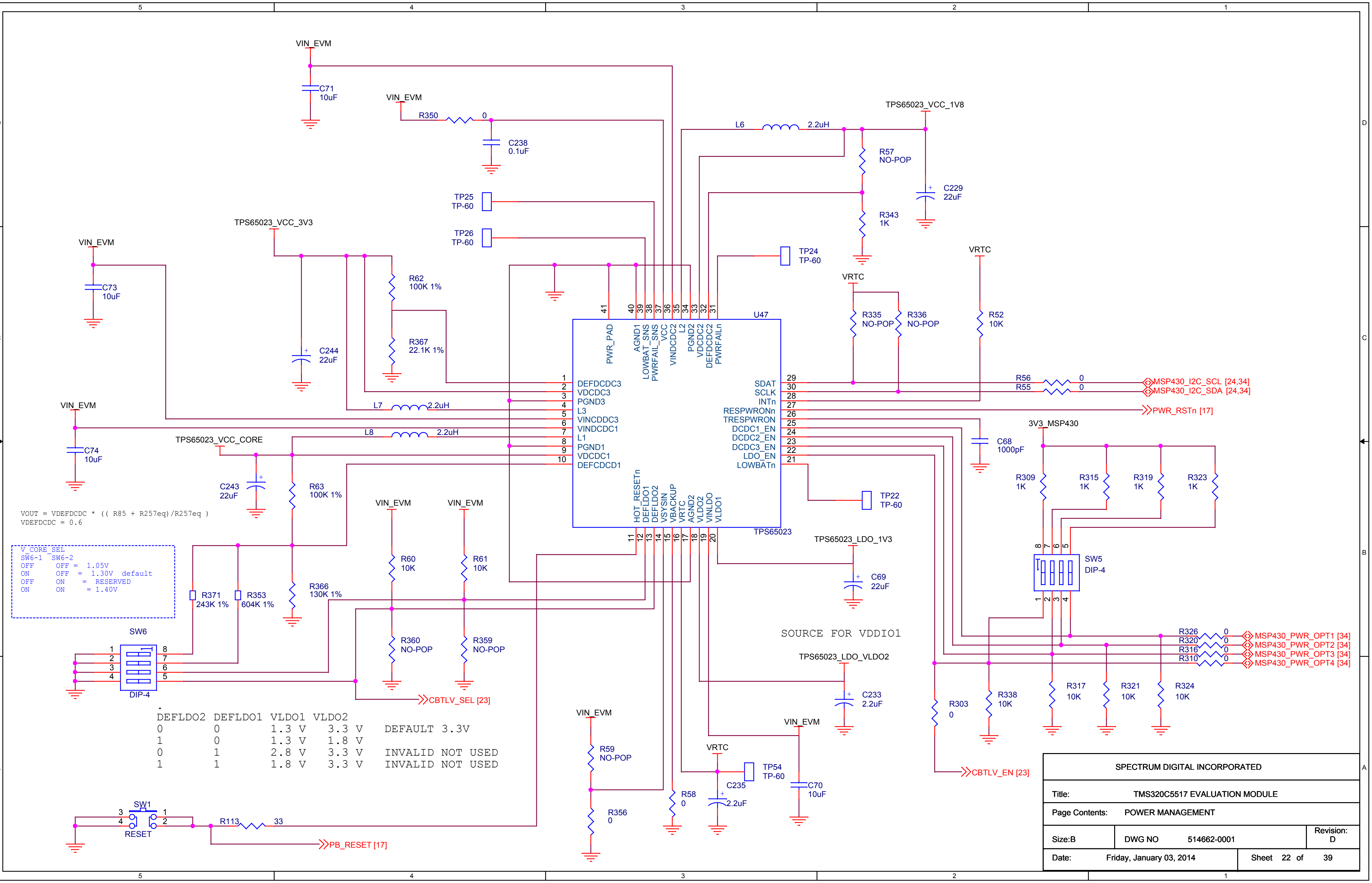
VIN_EVM
C71
10uF
R350
0
C238
0.1uF
TPS65023_VCC_1V8
L6
2.2uH
R57
NO-POP
C229
22uF
R343
1K
TP25
TP-60
TP26
TP-60
TP24
TP-60
TPS65023_VCC_3V3
C73
10uF
R62
100K 1%
R367
22.1K 1%
C244
22uF
VRTC
R335
NO-POP
R336
NO-POP
R52
10K
U47
PWR_PAD
AGND1
LOWBAT_SNS
PWRFAIL_SNS
VCC
VINDCDC2
L2
PGND2
VDCDC2
DEFDCDC2
PWRFAILn
DEFDCDC3
VDCDC3
PGND3
L3
VINCDDC3
VINDCDC1
L1
PGND1
VDCDC1
DEFCDCD1
SDAT
SCLK
INTn
RESPWRONn
TRESPWRON
DCDC1_EN
DCDC2_EN
DCDC3_EN
LDO_EN
LOWBATn
HOT_RESETn
DEFLDO1
DEFLDO2
VSYSIN
VBACKUP
VRTC
AGND2
VLDO2
VINLDO
VLDO1
TPS65023
L7
2.2uH
L8
2.2uH
R56
0
R55
0
MSP430_I2C_SCL [24,34]
MSP430_I2C_SDA [24,34]
PWR_RSTn [17]
C68
1000pF
3V3_MSP430
R309
1K
R315
1K
R319
1K
R323
1K
TPS65023_VCC_CORE
C74
10uF
C243
22uF
R63
100K 1%
R366
130K 1%
TP22
TP-60
TPS65023_LDO_1V3
C69
22uF
SW5
DIP-4
R60
10K
R61
10K
R360
NO-POP
R359
NO-POP
R371
243K 1%
R353
604K 1%
SW6
DIP-4
CBTLV_SEL [23]
SOURCE FOR VDDIO1
TPS65023_LDO_VLDO2
C233
2.2uF
R326
0
R320
0
R316
0
R310
0
MSP430_PWR_OPT1 [34]
MSP430_PWR_OPT2 [34]
MSP430_PWR_OPT3 [34]
MSP430_PWR_OPT4 [34]
R303
0
R338
10K
R317
10K
R321
10K
R324
10K
CBTLV_EN [23]
R59
NO-POP
R356
0
R58
0
C235
2.2uF
TP54
TP-60
C70
10uF
SW1
RESET
R113
33
PB_RESET [17]

VOUT = VDEFDCDC * ((R85 + R257eq)/R257eq)
VDEFDCDC = 0.6

V_CORE_SEL

SW6-1	SW6-2	
OFF	OFF	= 1.05V
ON	OFF	= 1.30V default
OFF	ON	= RESERVED
ON	ON	= 1.40V

DEFLDO2	DEFLDO1	VLDO1	VLDO2	
0	0	1.3 V	3.3 V	DEFAULT 3.3V
1	0	1.3 V	1.8 V	
0	1	2.8 V	3.3 V	INVALID NOT USED
1	1	1.8 V	3.3 V	INVALID NOT USED

SPECTRUM DIGITAL INCORPORATED

Title: TMS320C5517 EVALUATION MODULE

Page Contents: POWER MANAGEMENT

Size:B DWG NO 514662-0001 Revision: D

Date: Friday, January 03, 2014 Sheet 22 of 39

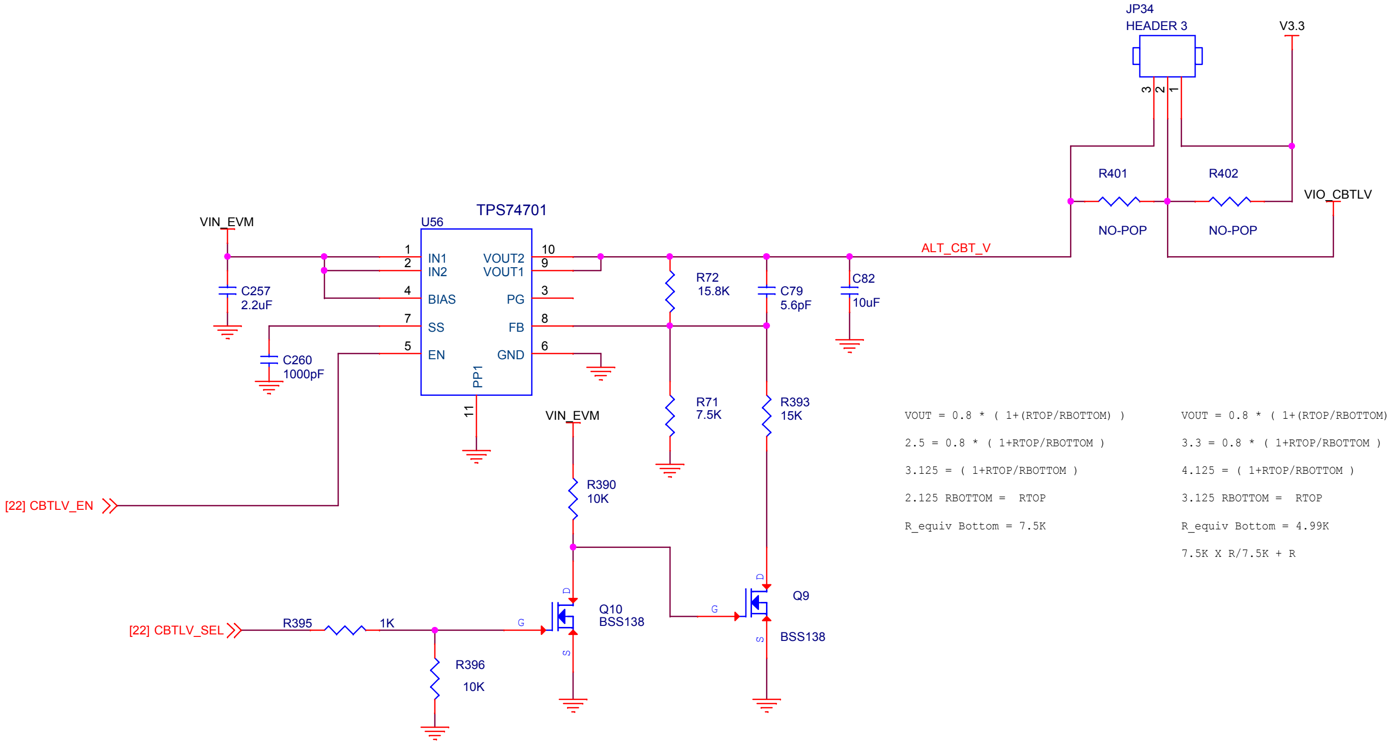
JP34
HEADER 3
3
2
1
V3.3
R401
NO-POP
R402
NO-POP
VIO_CBTLV
ALT_CBT_V
TPS74701
U56
VIN_EVM
1
2
4
7
5
IN1
IN2
BIAS
SS
EN
VOUT2
VOUT1
PG
FB
GND
10
9
3
8
6
PP1
11
C257
2.2uF
C260
1000pF
R72
15.8K
C79
5.6pF
C82
10uF
R71
7.5K
R393
15K
VIN_EVM
R390
10K
[22] CBTLV_EN
[22] CBTLV_SEL
R395
1K
R396
10K
G
D
S
Q10
BSS138
G
D
S
Q9
BSS138

VOUT = 0.8 * (1+(RTOP/RBOTTOM))

2.5 = 0.8 * (1+RTOP/RBOTTOM)

3.125 = (1+RTOP/RBOTTOM)

2.125 RBOTTOM = RTOP

R_equiv Bottom = 7.5K

VOUT = 0.8 * (1+(RTOP/RBOTTOM))

3.3 = 0.8 * (1+RTOP/RBOTTOM)

4.125 = (1+RTOP/RBOTTOM)

3.125 RBOTTOM = RTOP

R_equiv Bottom = 4.99K

7.5K X R/7.5K + R

VDDIO1 CBLTV_SEL = 0 (3.3 VDDIO1)REGULATOR OUTPUT = 3.3V
VDDIO1 CBLTV_SEL = 1 (1.8 VDDIO1)REGULATOR OUTPUT = 2.5V

SPECTRUM DIGITAL INCORPORATED			
Title:	TMS320C5517 EVALUATION MODULE		
Page Contents:	C5517 RTC REGULATOR		
Size:B	DWG NO 514662-0001		Revision: A
Date:	Friday, January 03, 2014	Sheet 23 of	39

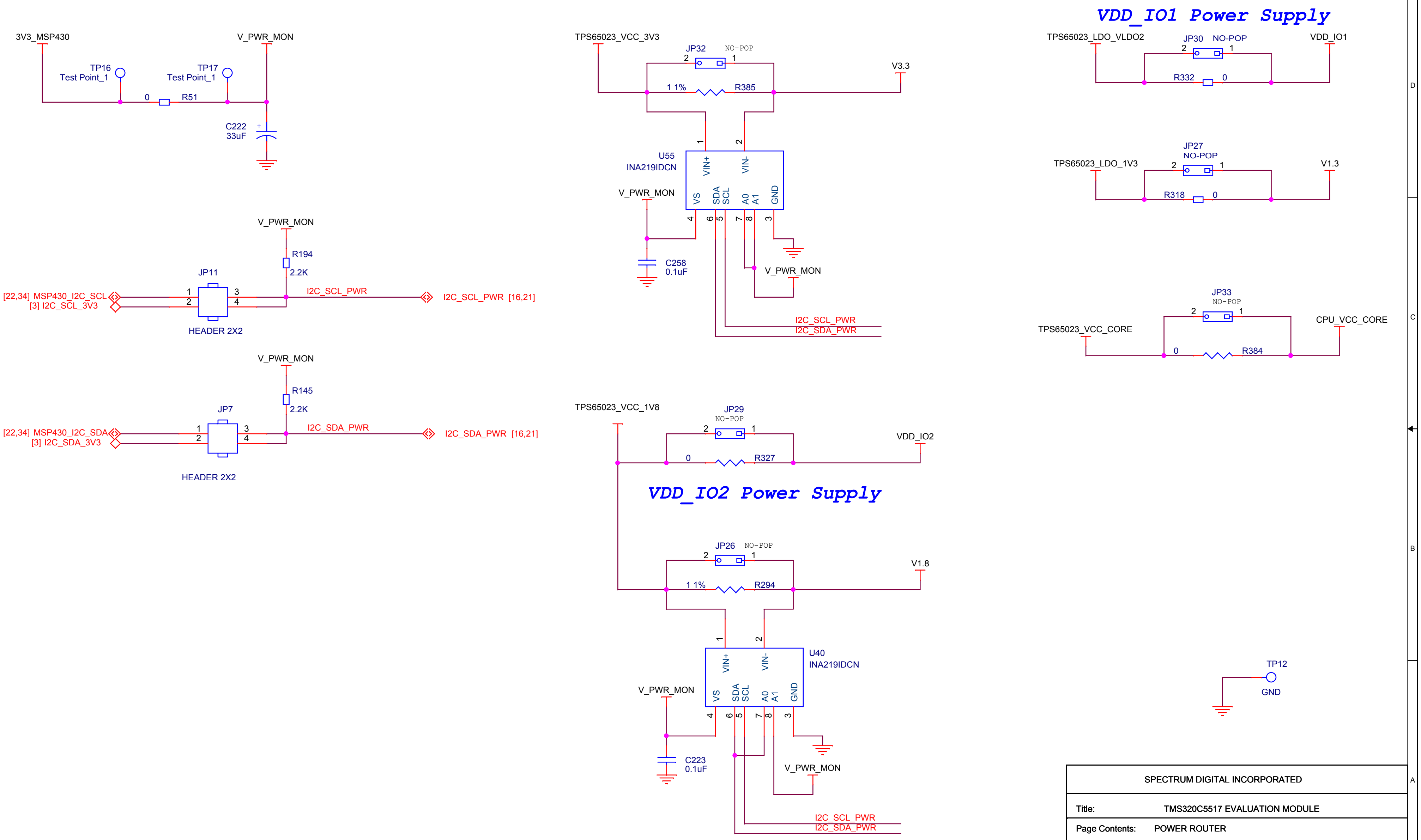
VDD_IO1 Power Supply
VDD_IO2 Power Supply
3V3_MSP430
V_PWR_MON
TP16
Test Point_1
TP17
Test Point_1
0
R51
C222
33uF
+
V_PWR_MON
R194
2.2K
JP11
1
2
3
4
[22,34] MSP430_I2C_SCL
[3] I2C_SCL_3V3
I2C_SCL_PWR
I2C_SCL_PWR [16,21]
HEADER 2X2
V_PWR_MON
R145
2.2K
JP7
1
2
3
4
[22,34] MSP430_I2C_SDA
[3] I2C_SDA_3V3
I2C_SDA_PWR
I2C_SDA_PWR [16,21]
HEADER 2X2
TPS65023_VCC_3V3
JP32
NO-POP
2
1
V3.3
1 1%
R385
U55
INA219IDCN
VIN+
VIN-
VS
SDA
SCL
A0
A1
GND
1
2
4
6
5
7
8
3
V_PWR_MON
C258
0.1uF
V_PWR_MON
I2C_SCL_PWR
I2C_SDA_PWR
TPS65023_VCC_1V8
JP29
NO-POP
2
1
VDD_IO2
0
R327
JP26
NO-POP
2
1
V1.8
1 1%
R294
U40
INA219IDCN
VIN+
VIN-
VS
SDA
SCL
A0
A1
GND
1
2
4
6
5
7
8
3
V_PWR_MON
C223
0.1uF
V_PWR_MON
I2C_SCL_PWR
I2C_SDA_PWR
TPS65023_LDO_VLDO2
JP30
NO-POP
2
1
VDD_IO1
R332
0
TPS65023_LDO_1V3
JP27
NO-POP
2
1
V1.3
R318
0
JP33
NO-POP
2
1
TPS65023_VCC_CORE
CPU_VCC_CORE
0
R384
TP12
GND
5
4
3
2
1
D
C
B
A

SPECTRUM DIGITAL INCORPORATED

Title: TMS320C5517 EVALUATION MODULE

Page Contents: POWER ROUTER

Size:B
DWG NO 514662-0001
Revision: A

Date: Friday, January 03, 2014
Sheet 24 of 39

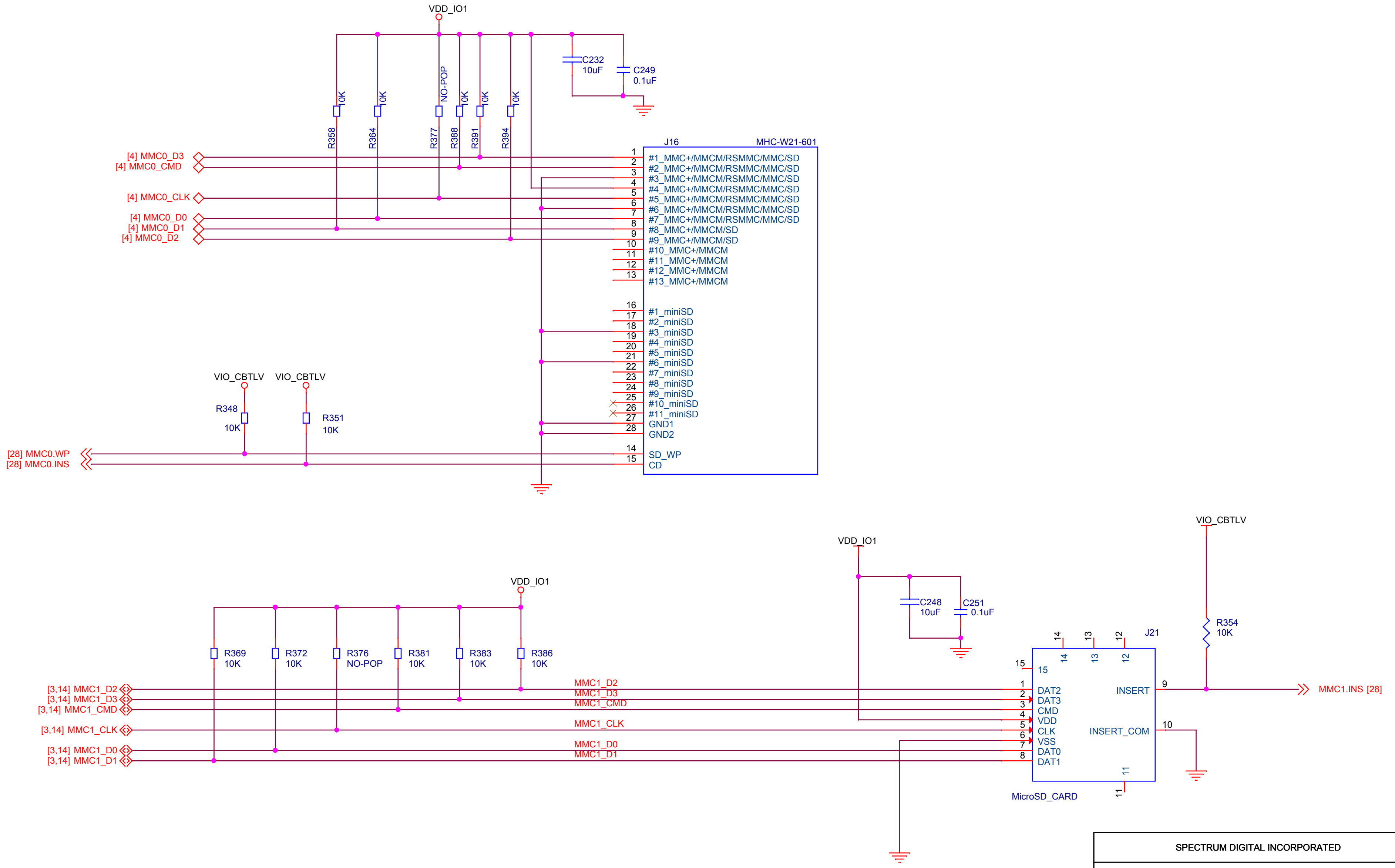
VDD_IO1
C232
10uF
C249
0.1uF
10K
10K
NO-POP
10K
10K
10K
R358
R364
R377
R388
R391
R394
J16
MHC-W21-601
[4] MMC0_D3
[4] MMC0_CMD
[4] MMC0_CLK
[4] MMC0_D0
[4] MMC0_D1
[4] MMC0_D2
1 #1_MMC+/MMCM/RSMMC/MMC/SD
2 #2_MMC+/MMCM/RSMMC/MMC/SD
3 #3_MMC+/MMCM/RSMMC/MMC/SD
4 #4_MMC+/MMCM/RSMMC/MMC/SD
5 #5_MMC+/MMCM/RSMMC/MMC/SD
6 #6_MMC+/MMCM/RSMMC/MMC/SD
7 #7_MMC+/MMCM/RSMMC/MMC/SD
8 #8_MMC+/MMCM/SD
9 #9_MMC+/MMCM/SD
10 #10_MMC+/MMCM
11 #11_MMC+/MMCM
12 #12_MMC+/MMCM
13 #13_MMC+/MMCM
16 #1_miniSD
17 #2_miniSD
18 #3_miniSD
19 #4_miniSD
20 #5_miniSD
21 #6_miniSD
22 #7_miniSD
23 #8_miniSD
24 #9_miniSD
25 #10_miniSD
26 #11_miniSD
27 GND1
28 GND2
14 SD_WP
15 CD
VIO_CBTLV
VIO_CBTLV
R348
10K
R351
10K
[28] MMC0.WP
[28] MMC0.INS
VDD_IO1
VDD_IO1
C248
10uF
C251
0.1uF
VIO_CBTLV
R354
10K
J21
R369
10K
R372
10K
R376
NO-POP
R381
10K
R383
10K
R386
10K
[3,14] MMC1_D2
[3,14] MMC1_D3
[3,14] MMC1_CMD
[3,14] MMC1_CLK
[3,14] MMC1_D0
[3,14] MMC1_D1
MMC1_D2
MMC1_D3
MMC1_CMD
MMC1_CLK
MMC1_D0
MMC1_D1
14
13
12
15
1 DAT2
2 DAT3
3 CMD
4 VDD
5 CLK
6 VSS
7 DAT0
8 DAT1
INSERT 9
INSERT_COM 10
11
MicroSD_CARD
MMC1.INS [28]

SPECTRUM DIGITAL INCORPORATED

Title:	TMS320C5517 EVALUATION MODULE	
Page Contents:	MMC/SD SOCKETS	
Size:B	DWG NO 514662-0001	Revision: A
Date:	Friday, January 03, 2014	Sheet 25 of 39

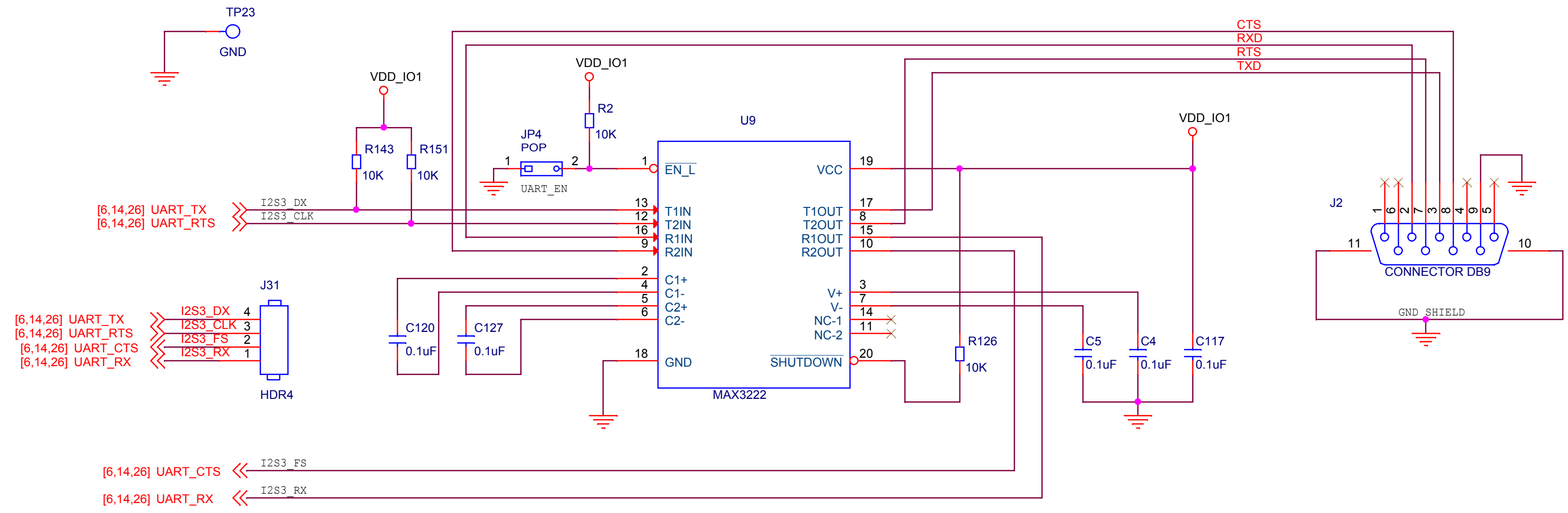
TP23
GND
VDD_IO1
R143
10K
R151
10K
VDD_IO1
R2
10K
JP4
POP
1
2
UART_EN
U9
1
EN_L
VCC
19
CTS
RXD
RTS
TXD
VDD_IO1
J2
[6,14,26] UART_TX
[6,14,26] UART_RTS
I2S3_DX
I2S3_CLK
13
12
16
9
T1IN
T2IN
R1IN
R2IN
T1OUT
T2OUT
R1OUT
R2OUT
17
8
15
10
2
4
5
6
C1+
C1-
C2+
C2-
V+
V-
NC-1
NC-2
3
7
14
11
J31
[6,14,26] UART_TX
[6,14,26] UART_RTS
[6,14,26] UART_CTS
[6,14,26] UART_RX
I2S3_DX
I2S3_CLK
I2S3_FS
I2S3_RX
4
3
2
1
HDR4
C120
0.1uF
C127
0.1uF
18
GND
SHUTDOWN
20
MAX3222
R126
10K
C5
0.1uF
C4
0.1uF
C117
0.1uF
1
6
2
7
3
8
4
9
5
11
10
CONNECTOR DB9
GND_SHIELD
[6,14,26] UART_CTS
I2S3_FS
[6,14,26] UART_RX
I2S3_RX

SPECTRUM DIGITAL INCORPORATED

Title: TMS320C5517 EVALUATION MODULE

Page Contents: RS232(UART)

Size:B
DWG NO 514662-0001
Revision: D

Date: Friday, January 03, 2014
Sheet 26 of 39

256K-Bit I2C EEPROM

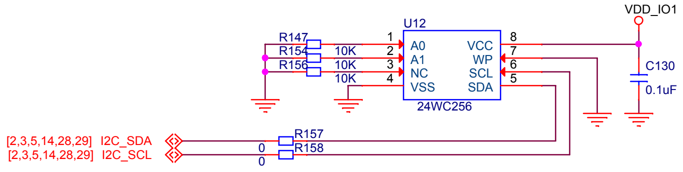
VDD_IO1
U12
R147
R154
R156
10K
10K
10K
1
2
3
4
A0
A1
NC
VSS
VCC
WP
SCL
SDA
8
7
6
5
24WC256
C130
0.1uF
[2,3,5,14,28,29] I2C_SDA
[2,3,5,14,28,29] I2C_SCL
R157
R158
0
0

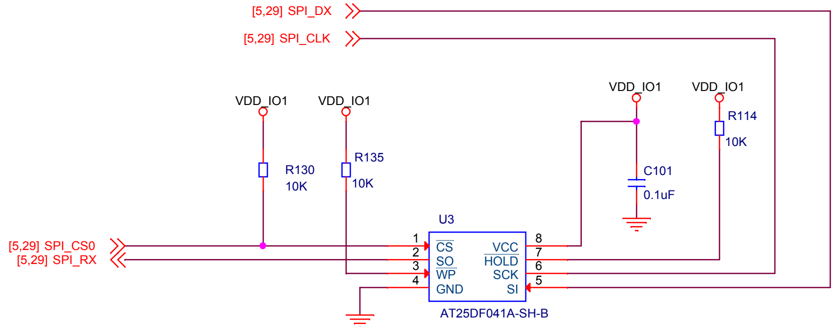
[5,29] SPI_DX
[5,29] SPI_CLK
VDD_IO1
VDD_IO1
VDD_IO1
VDD_IO1
R130
10K
R135
10K
R114
10K
C101
0.1uF
U3
[5,29] SPI_CS0
[5,29] SPI_RX
1
2
3
4
CS
SO
WP
GND
VCC
HOLD
SCK
SI
8
7
6
5
AT25DF041A-SH-B

SPI FLASH

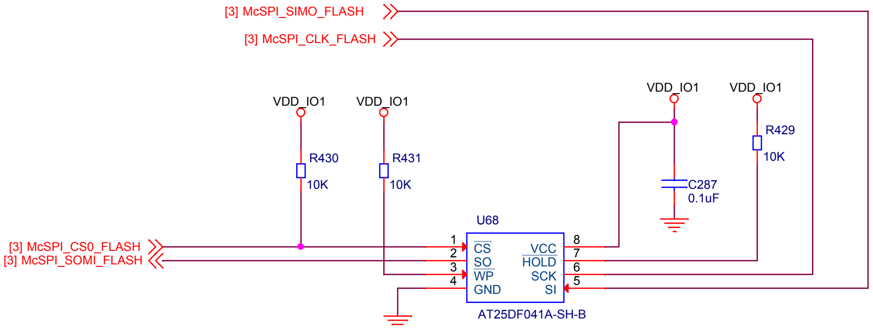
[3] McSPI_SIMO_FLASH
[3] McSPI_CLK_FLASH
VDD_IO1
VDD_IO1
VDD_IO1
VDD_IO1
R430
10K
R431
10K
R429
10K
C287
0.1uF
U68
[3] McSPI_CS0_FLASH
[3] McSPI_SOMI_FLASH
1
2
3
4
CS
SO
WP
GND
VCC
HOLD
SCK
SI
8
7
6
5
AT25DF041A-SH-B

SPI FLASH - McSPI

SPECTRUM DIGITAL INCORPORATED

Title: TMS320C5517 EVALUATION MODULE

Page Contents: SPI FLASH/I2C EEPROM

Size:B DWG NO 514662-0001 Revision: B

Date: Friday, January 03, 2014 Sheet 27 of 39

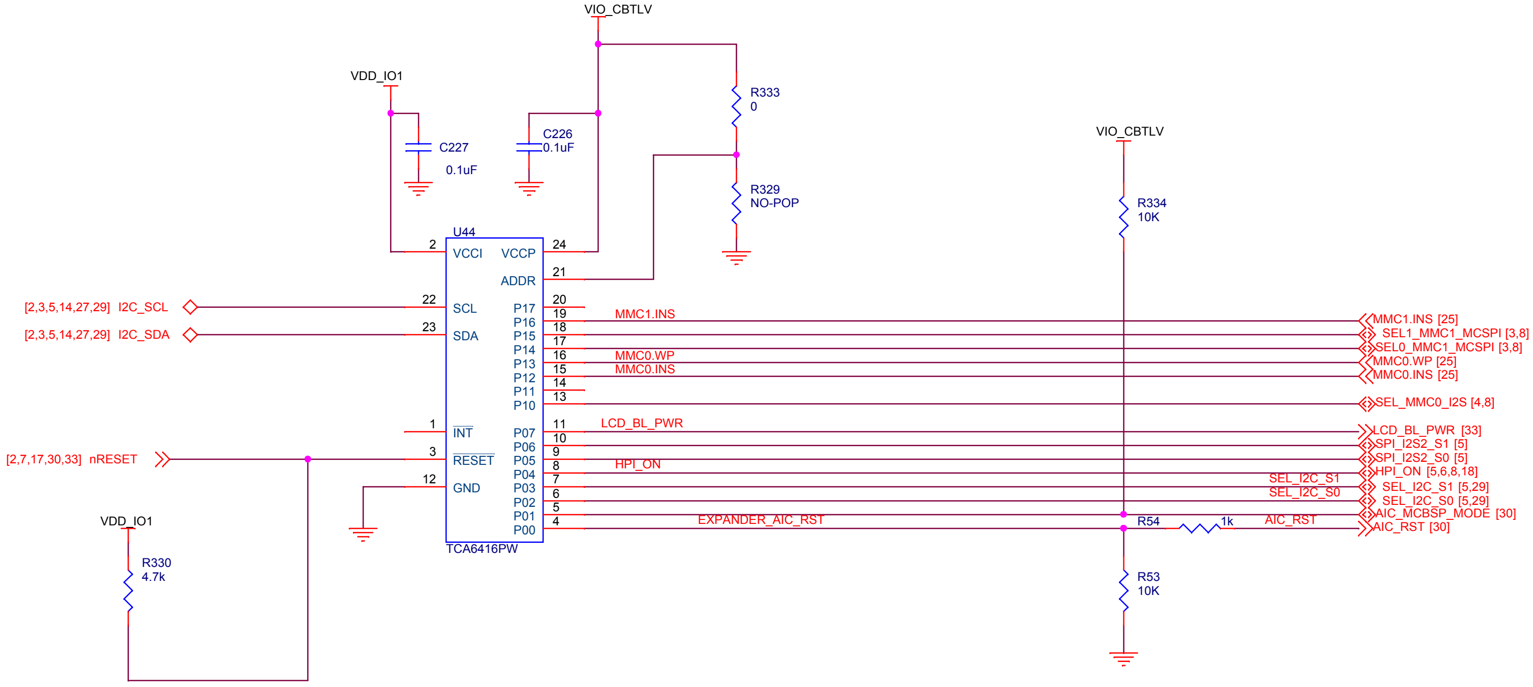
VIO_CBTLV
VDD_IO1
R333
0
C227
0.1uF
C226
0.1uF
R329
NO-POP
VIO_CBTLV
R334
10K
U44
VCCI
VCCP
ADDR
SCL
SDA
INT
RESET
GND
P17
P16
P15
P14
P13
P12
P11
P10
P07
P06
P05
P04
P03
P02
P01
P00
TCA6416PW
2
24
21
22
23
1
3
12
20
19
18
17
16
15
14
13
11
10
9
8
7
6
5
4
[2,3,5,14,27,29] I2C_SCL
[2,3,5,14,27,29] I2C_SDA
[2,7,17,30,33] nRESET
VDD_IO1
R330
4.7k
MMC1.INS
MMC0.WP
MMC0.INS
LCD_BL_PWR
HPI_ON
SEL_I2C_S1
SEL_I2C_S0
EXPANDER_AIC_RST
R54
1k
AIC_RST
R53
10K
MMC1.INS [25]
SEL1_MMC1_MCSPI [3,8]
SEL0_MMC1_MCSPI [3,8]
MMC0.WP [25]
MMC0.INS [25]
SEL_MMC0_I2S [4,8]
LCD_BL_PWR [33]
SPI_I2S2_S1 [5]
SPI_I2S2_S0 [5]
HPI_ON [5,6,8,18]
SEL_I2C_S1 [5,29]
SEL_I2C_S0 [5,29]
AIC_MCBSP_MODE [30]
AIC_RST [30]

IO EXPANDER

SPECTRUM DIGITAL INCORPORATED

Title:	TMS320C5517 EVALUATION MODULE
Page Contents:	I2C EXPANDER
Size:B	DWG NO 514662-0001
Revision:	D
Date:	Friday, January 03, 2014
Sheet	28 of 39

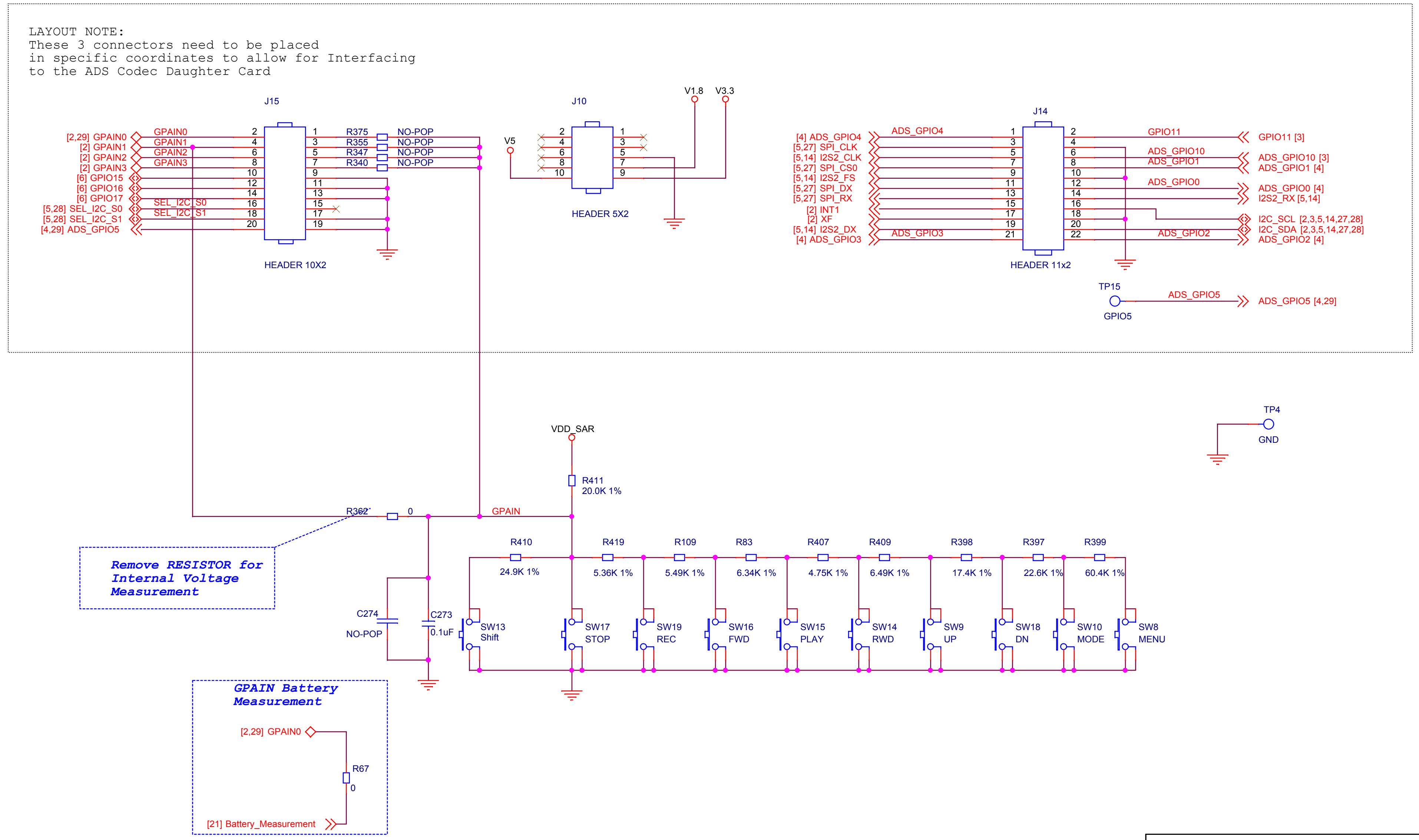

LAYOUT NOTE:
These 3 connectors need to be placed
in specific coordinates to allow for Interfacing
to the ADS Codec Daughter Card

Remove RESISTOR for Internal Voltage Measurement

GPAIN Battery Measurement

J15
HEADER 10X2
[2,29] GPAIN0
[2] GPAIN1
[2] GPAIN2
[2] GPAIN3
[6] GPIO15
[6] GPIO16
[6] GPIO17
[5,28] SEL_I2C_S0
[5,28] SEL_I2C_S1
[4,29] ADS_GPIO5
GPAIN0
GPAIN1
GPAIN2
GPAIN3
SEL_I2C_S0
SEL_I2C_S1
R375
R355
R347
R340
NO-POP
NO-POP
NO-POP
NO-POP
J10
HEADER 5X2
V5
V1.8
V3.3
J14
HEADER 11x2
[4] ADS_GPIO4
[5,27] SPI_CLK
[5,14] I2S2_CLK
[5,27] SPI_CS0
[5,14] I2S2_FS
[5,27] SPI_DX
[5,27] SPI_RX
[2] INT1
[2] XF
[5,14] I2S2_DX
[4] ADS_GPIO3
ADS_GPIO4
ADS_GPIO3
GPIO11
ADS_GPIO10
ADS_GPIO1
ADS_GPIO0
ADS_GPIO2
GPIO11 [3]
ADS_GPIO10 [3]
ADS_GPIO1 [4]
ADS_GPIO0 [4]
I2S2_RX [5,14]
I2C_SCL [2,3,5,14,27,28]
I2C_SDA [2,3,5,14,27,28]
ADS_GPIO2 [4]
TP15
GPIO5
ADS_GPIO5
ADS_GPIO5 [4,29]
TP4
GND
VDD_SAR
R411
20.0K 1%
R362
0
GPAIN
C274
NO-POP
C273
0.1uF
R410
24.9K 1%
R419
5.36K 1%
R109
5.49K 1%
R83
6.34K 1%
R407
4.75K 1%
R409
6.49K 1%
R398
17.4K 1%
R397
22.6K 1%
R399
60.4K 1%
SW13
Shift
SW17
STOP
SW19
REC
SW16
FWD
SW15
PLAY
SW14
RWD
SW9
UP
SW18
DN
SW10
MODE
SW8
MENU
[2,29] GPAIN0
R67
0
[21] Battery_Measurement

SPECTRUM DIGITAL INCORPORATED

Title:	TMS320C5517 EVALUATION MODULE
Page Contents:	SAR RESISTOR NETWORK
Size:B	DWG NO 514662-0001
Revision:	D
Date:	Friday, January 03, 2014
Sheet	29 of 39

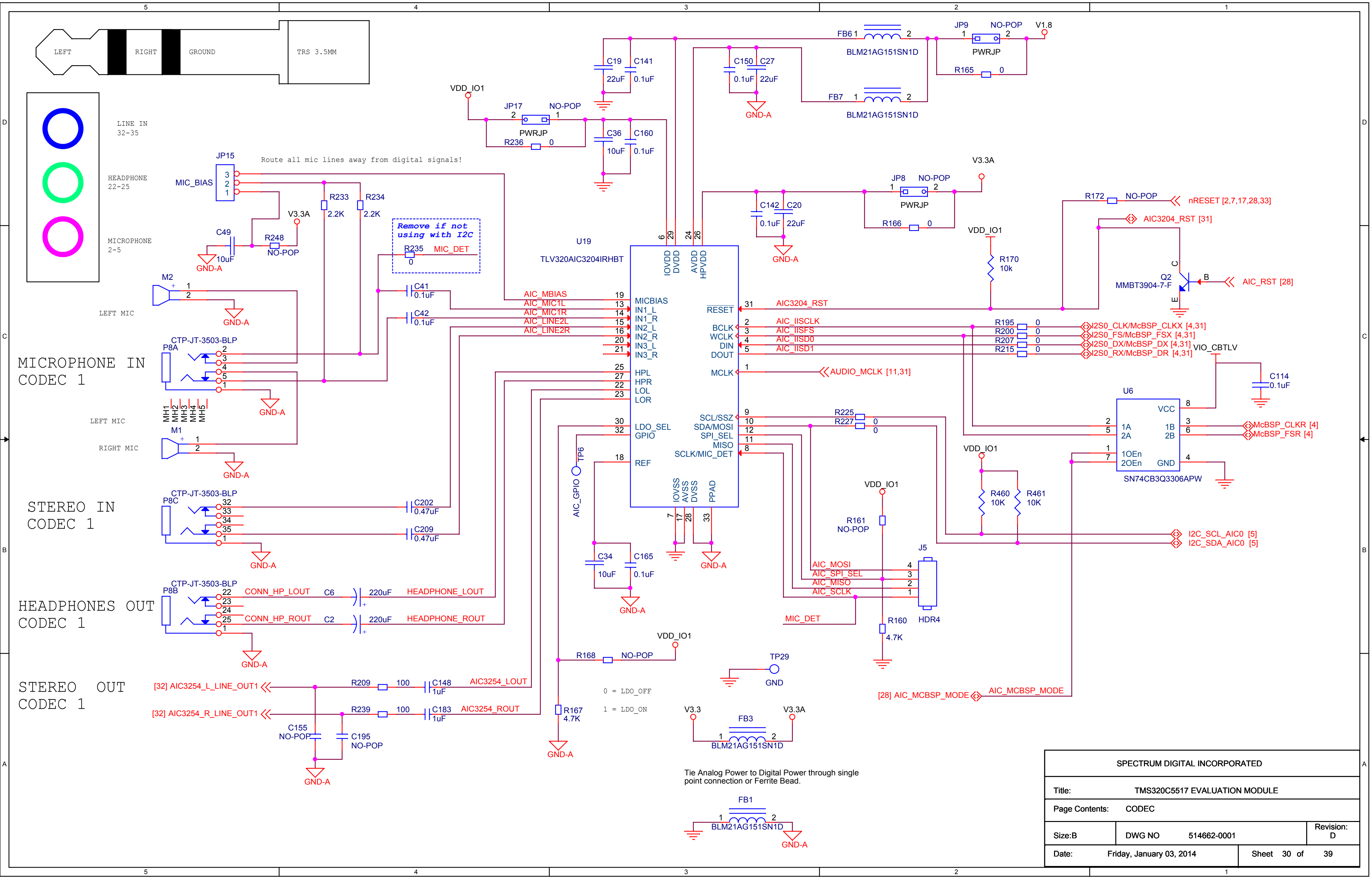
LEFT
RIGHT
GROUND
TRS 3.5MM
LINE IN
32-35
HEADPHONE
22-25
MICROPHONE
2-5
MICROPHONE IN
CODEC 1
STEREO IN
CODEC 1
HEADPHONES OUT
CODEC 1
STEREO OUT
CODEC 1
LEFT MIC
RIGHT MIC
Route all mic lines away from digital signals!
Remove if not using with I2C
JP15
MIC_BIAS
C49
10uF
R248
NO-POP
V3.3A
R233
2.2K
R234
2.2K
R235
0
MIC_DET
M2
M1
CTP-JT-3503-BLP
P8A
P8C
P8B
MH1
MH2
MH3
MH4
MH5
C41
0.1uF
C42
0.1uF
C202
0.47uF
C209
0.47uF
C6
220uF
C2
CONN_HP_LOUT
CONN_HP_ROUT
HEADPHONE_LOUT
HEADPHONE_ROUT
[32] AIC3254_L_LINE_OUT1
[32] AIC3254_R_LINE_OUT1
R209
R239
100
C148
C183
1uF
AIC3254_LOUT
AIC3254_ROUT
C155
C195
NO-POP
GND-A
VDD_IO1
JP17
PWRJP
R236
C19
22uF
C141
0.1uF
C36
10uF
C160
FB6
FB7
BLM21AG151SN1D
C150
C27
JP9
V1.8
R165
U19
TLV320AIC3204IRHBT
IOVDD
DVDD
AVDD
HPVDD
MICBIAS
IN1_L
IN1_R
IN2_L
IN2_R
IN3_L
IN3_R
HPL
HPR
LOL
LOR
LDO_SEL
GPIO
REF
IOVSS
AVSS
DVSS
PPAD
RESET
BCLK
WCLK
DIN
DOUT
MCLK
SCL/SSZ
SDA/MOSI
SPI_SEL
MISO
SCLK/MIC_DET
AIC_MBIAS
AIC_MIC1L
AIC_MIC1R
AIC_LINE2L
AIC_LINE2R
AIC3204_RST
AIC_IISCLK
AIC_IISFS
AIC_IISD0
AIC_IISD1
AUDIO_MCLK [11,31]
TP6
AIC_GPIO
C34
C165
R168
R167
4.7K
0 = LDO_OFF
1 = LDO_ON
TP29
GND
V3.3
FB3
FB1
Tie Analog Power to Digital Power through single point connection or Ferrite Bead.
JP8
C142
C20
R166
R170
10k
R172
nRESET [2,7,17,28,33]
AIC3204_RST [31]
Q2
MMBT3904-7-F
AIC_RST [28]
R195
R200
R207
R215
I2S0_CLK/McBSP_CLKX [4,31]
I2S0_FS/McBSP_FSX [4,31]
I2S0_DX/McBSP_DX [4,31]
I2S0_RX/McBSP_DR [4,31]
VIO_CBTLV
C114
0.1uF
U6
VCC
1A
2A
1B
2B
1OEn
2OEn
SN74CB3Q3306APW
McBSP_CLKR [4]
McBSP_FSR [4]
R225
R227
R460
R461
10K
I2C_SCL_AIC0 [5]
I2C_SDA_AIC0 [5]
R161
J5
HDR4
AIC_MOSI
AIC_SPI_SEL
AIC_MISO
AIC_SCLK
R160
4.7K
[28] AIC_MCBSP_MODE
AIC_MCBSP_MODE

SPECTRUM DIGITAL INCORPORATED

Title: TMS320C5517 EVALUATION MODULE

Page Contents: CODEC

Size:B

DWG NO 514662-0001

Revision: D

Date: Friday, January 03, 2014

Sheet 30 of 39

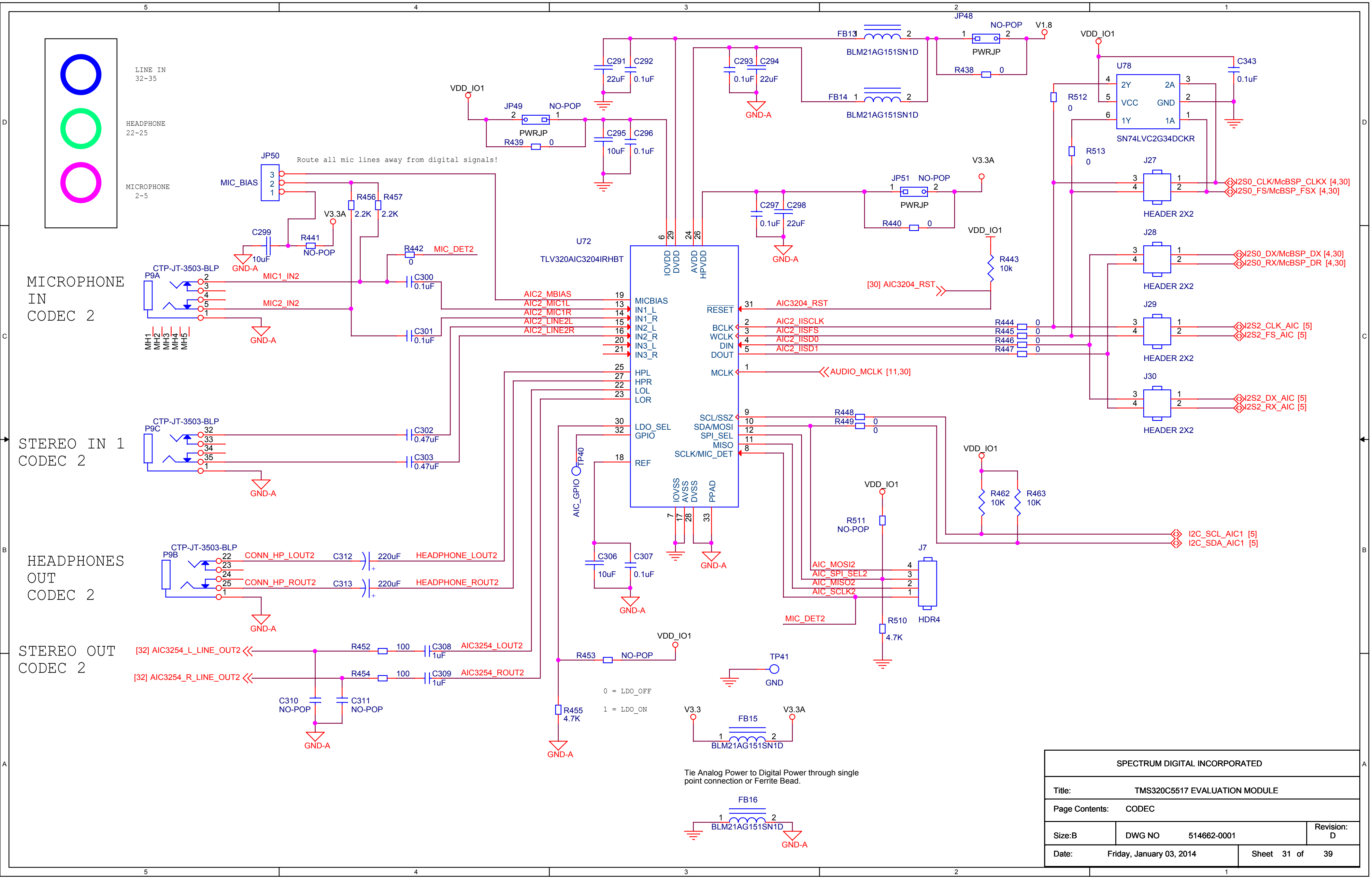
LINE IN
32-35
HEADPHONE
22-25
MICROPHONE
2-5
MICROPHONE IN CODEC 2
STEREO IN 1 CODEC 2
HEADPHONES OUT CODEC 2
STEREO OUT CODEC 2
Route all mic lines away from digital signals!
JP50
MIC_BIAS
JP49
NO-POP
PWRJP
R439
0
VDD_IO1
C291
22uF
C292
0.1uF
C295
10uF
C296
0.1uF
FB13
BLM21AG151SN1D
FB14
C293
0.1uF
C294
22uF
GND-A
JP48
NO-POP
V1.8
PWRJP
R438
VDD_IO1
U78
2Y
2A
VCC
GND
1Y
1A
SN74LVC2G34DCKR
C343
0.1uF
R512
0
R513
0
J27
J28
J29
J30
HEADER 2X2
I2S0_CLK/McBSP_CLKX [4,30]
I2S0_FS/McBSP_FSX [4,30]
I2S0_DX/McBSP_DX [4,30]
I2S0_RX/McBSP_DR [4,30]
I2S2_CLK_AIC [5]
I2S2_FS_AIC [5]
I2S2_DX_AIC [5]
I2S2_RX_AIC [5]
V3.3A
JP51
NO-POP
PWRJP
R440
0
C297
0.1uF
C298
22uF
R456
2.2K
R457
2.2K
V3.3A
C299
10uF
R441
NO-POP
R442
0
MIC_DET2
CTP-JT-3503-BLP
P9A
MH1
MH2
MH3
MH4
MH5
MIC1_IN2
MIC2_IN2
C300
0.1uF
C301
0.1uF
U72
TLV320AIC3204IRHBT
IOVDD
DVDD
AVDD
HPVDD
AIC2_MBIAS
AIC2_MIC1L
AIC2_MIC1R
AIC2_LINE2L
AIC2_LINE2R
MICBIAS
IN1_L
IN1_R
IN2_L
IN2_R
IN3_L
IN3_R
HPL
HPR
LOL
LOR
LDO_SEL
GPIO
REF
RESET
BCLK
WCLK
DIN
DOUT
MCLK
SCL/SSZ
SDA/MOSI
SPI_SEL
MISO
SCLK/MIC_DET
IOVSS
AVSS
DVSS
PPAD
VDD_IO1
R443
10k
[30] AIC3204_RST
AIC3204_RST
AIC2_IISCLK
AIC2_IISFS
AIC2_IISD0
AIC2_IISD1
R444
R445
R446
R447
AUDIO_MCLK [11,30]
R448
R449
VDD_IO1
R462
10K
R463
10K
I2C_SCL_AIC1 [5]
I2C_SDA_AIC1 [5]
VDD_IO1
R511
NO-POP
J7
HDR4
AIC_MOSI2
AIC_SPI_SEL2
AIC_MISO2
AIC_SCLK2
MIC_DET2
R510
4.7K
TP40
AIC_GPIO
C306
10uF
C307
0.1uF
P9C
C302
0.47uF
C303
0.47uF
P9B
CONN_HP_LOUT2
CONN_HP_ROUT2
C312
C313
220uF
HEADPHONE_LOUT2
HEADPHONE_ROUT2
[32] AIC3254_L_LINE_OUT2
[32] AIC3254_R_LINE_OUT2
R452
R454
100
C308
C309
1uF
AIC3254_LOUT2
AIC3254_ROUT2
C310
NO-POP
C311
NO-POP
R453
NO-POP
R455
4.7K
0 = LDO_OFF
1 = LDO_ON
TP41
GND
V3.3
V3.3A
FB15
FB16
BLM21AG151SN1D
Tie Analog Power to Digital Power through single point connection or Ferrite Bead.

SPECTRUM DIGITAL INCORPORATED

Title:	TMS320C5517 EVALUATION MODULE
Page Contents:	CODEC
Size:B	DWG NO 514662-0001
Revision:	D
Date:	Friday, January 03, 2014
Sheet	31 of 39

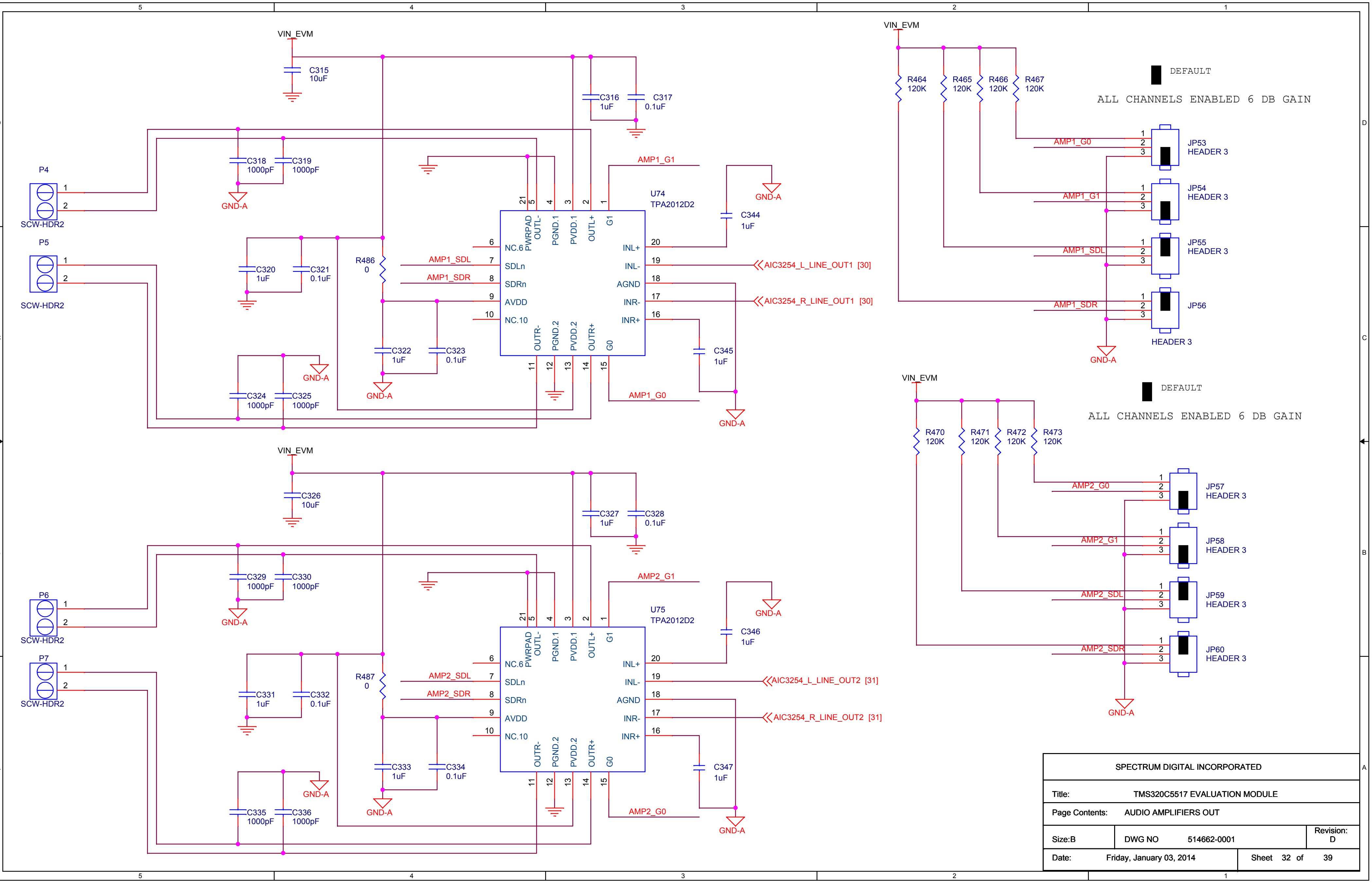
VIN_EVM
C315 10uF
C316 1uF
C317 0.1uF
C318 1000pF
C319 1000pF
GND-A
P4
SCW-HDR2
P5
SCW-HDR2
C320 1uF
C321 0.1uF
R486 0
AMP1_SDL
AMP1_SDR
C322 1uF
C323 0.1uF
C324 1000pF
C325 1000pF
AMP1_G1
AMP1_G0
U74
TPA2012D2
NC.6
SDLn
SDRn
AVDD
NC.10
PWRPAD
OUTL-
PGND.1
PVDD.1
OUTL+
G1
INL+
INL-
AGND
INR-
INR+
OUTR-
PGND.2
PVDD.2
OUTR+
G0
C344 1uF
C345 1uF
AIC3254_L_LINE_OUT1 [30]
AIC3254_R_LINE_OUT1 [30]
R464 120K
R465 120K
R466 120K
R467 120K
DEFAULT
ALL CHANNELS ENABLED 6 DB GAIN
AMP1_G0
AMP1_G1
AMP1_SDL
AMP1_SDR
JP53 HEADER 3
JP54 HEADER 3
JP55 HEADER 3
JP56
HEADER 3
C326 10uF
C327 1uF
C328 0.1uF
C329 1000pF
C330 1000pF
P6
SCW-HDR2
P7
SCW-HDR2
C331 1uF
C332 0.1uF
R487 0
AMP2_SDL
AMP2_SDR
C333 1uF
C334 0.1uF
C335 1000pF
C336 1000pF
AMP2_G1
AMP2_G0
U75
TPA2012D2
C346 1uF
C347 1uF
AIC3254_L_LINE_OUT2 [31]
AIC3254_R_LINE_OUT2 [31]
R470 120K
R471 120K
R472 120K
R473 120K
DEFAULT
ALL CHANNELS ENABLED 6 DB GAIN
AMP2_G0
AMP2_G1
AMP2_SDL
AMP2_SDR
JP57 HEADER 3
JP58 HEADER 3
JP59 HEADER 3
JP60 HEADER 3

SPECTRUM DIGITAL INCORPORATED

Title: TMS320C5517 EVALUATION MODULE

Page Contents: AUDIO AMPLIFIERS OUT

Size:B DWG NO 514662-0001 Revision: D

Date: Friday, January 03, 2014 Sheet 32 of 39

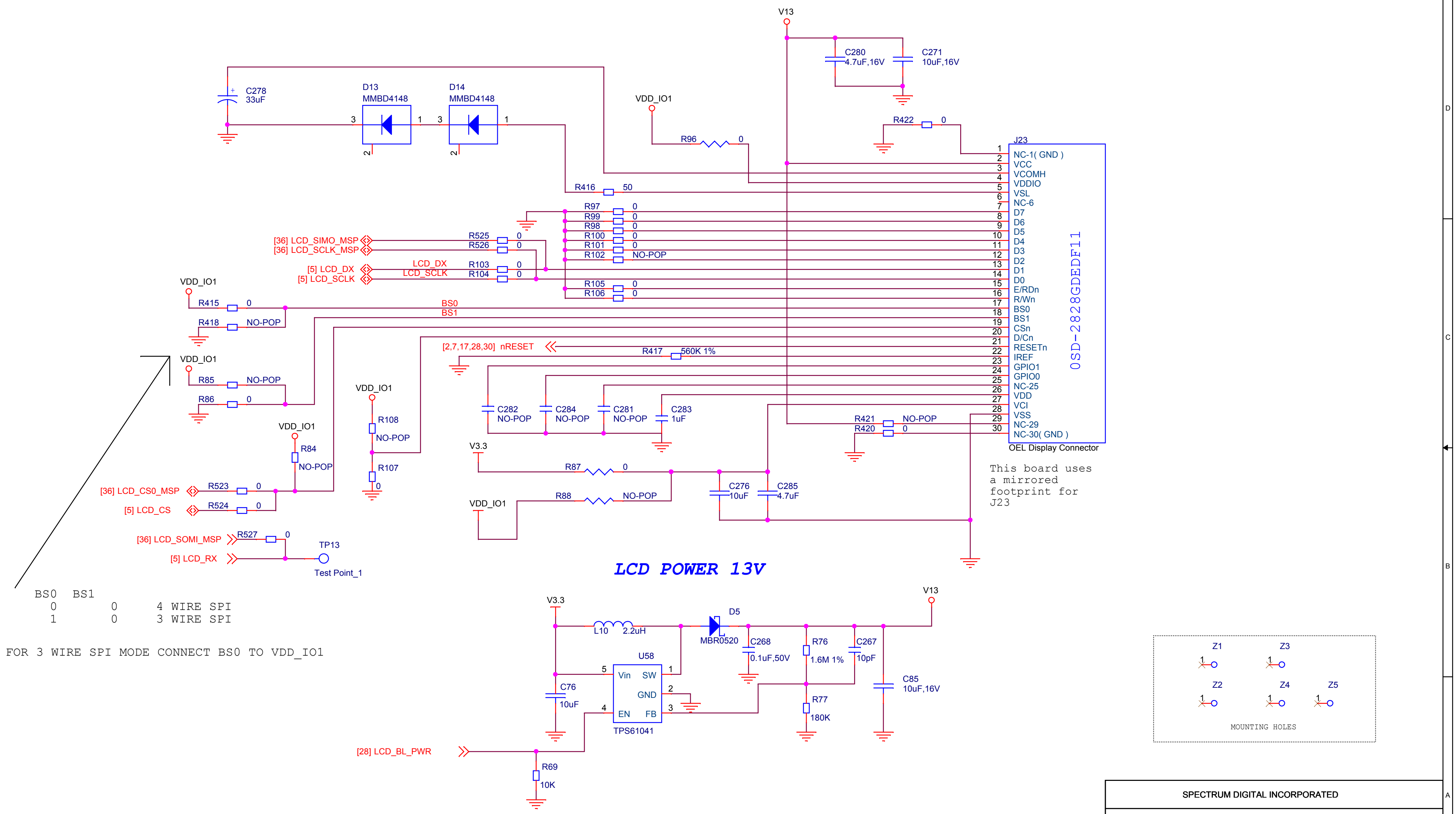
V13
C280
4.7uF,16V
C271
10uF,16V
C278
33uF
D13
MMBD4148
D14
MMBD4148
VDD_IO1
R96
0
R422
0
R416
50
J23
1 NC-1(GND)
2 VCC
3 VCOMH
4 VDDIO
5 VSL
6 NC-6
7 D7
8 D6
9 D5
10 D4
11 D3
12 D2
13 D1
14 D0
15 E/RDn
16 R/Wn
17 BS0
18 BS1
19 CSn
20 D/Cn
21 RESETn
22 IREF
23 GPIO1
24 GPIO0
25 NC-25
26 VDD
27 VCI
28 VSS
29 NC-29
30 NC-30(GND)
OSD-2828GDEDF11
OEL Display Connector
R97 0
R99 0
R98 0
R100 0
R101 0
R102 NO-POP
R105 0
R106 0
[36] LCD_SIMO_MSP
[36] LCD_SCLK_MSP
R525 0
R526 0
[5] LCD_DX
[5] LCD_SCLK
LCD_DX
LCD_SCLK
R103 0
R104 0
R415 0
R418 NO-POP
BS0
BS1
[2,7,17,28,30] nRESET
R417 560K 1%
R85 NO-POP
R86 0
C282 NO-POP
C284 NO-POP
C281 NO-POP
C283 1uF
R421 NO-POP
R420 0
R108 NO-POP
R107 0
R84 NO-POP
V3.3
R87 0
R88 NO-POP
C276 10uF
C285 4.7uF
[36] LCD_CS0_MSP
[5] LCD_CS
R523 0
R524 0
[36] LCD_SOMI_MSP
[5] LCD_RX
R527 0
TP13
Test Point_1
LCD POWER 13V
L10 2.2uH
D5
MBR0520
C268 0.1uF,50V
R76 1.6M 1%
C267 10pF
C85 10uF,16V
U58
Vin SW GND EN FB
TPS61041
C76 10uF
[28] LCD_BL_PWR
R69 10K
R77 180K
Z1 Z3 Z2 Z4 Z5
MOUNTING HOLES

This board uses
a mirrored
footprint for
J23

BS0	BS1	
0	0	4 WIRE SPI
1	0	3 WIRE SPI

FOR 3 WIRE SPI MODE CONNECT BS0 TO VDD_IO1

SPECTRUM DIGITAL INCORPORATED

Title: TMS320C5517 EVALUATION MODULE

Page Contents: COLOR LCD INTERFACE

Size:B DWG NO 514662-0001 Revision: D

Date: Friday, January 03, 2014 Sheet 33 of 39

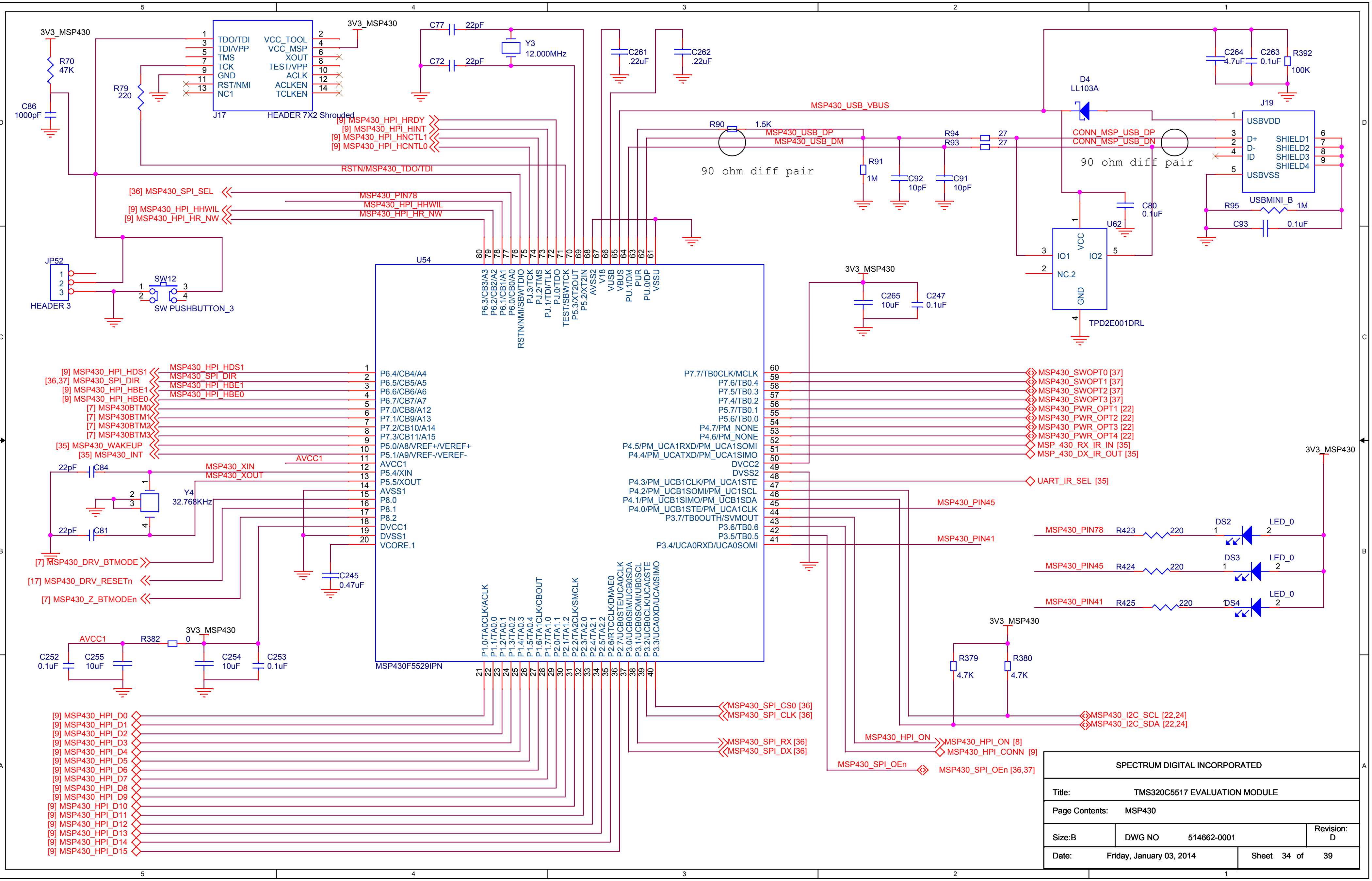
3V3_MSP430
R70 47K
C86 1000pF
R79 220
J17 HEADER 7X2 Shrouded
TDO/TDI
TDI/VPP
TMS
TCK
GND
RST/NMI
NC1
VCC_TOOL
VCC_MSP
XOUT
TEST/VPP
ACLK
ACLKEN
TCLKEN
C77 22pF
C72 22pF
Y3 12.000MHz
C261 .22uF
C262 .22uF
[9] MSP430_HPI_HRDY
[9] MSP430_HPI_HINT
[9] MSP430_HPI_HNCTL1
[9] MSP430_HPI_HCNTL0
RSTN/MSP430_TDO/TDI
[36] MSP430_SPI_SEL
MSP430_PIN78
MSP430_HPI_HHWIL
MSP430_HPI_HR_NW
[9] MSP430_HPI_HHWIL
[9] MSP430_HPI_HR_NW
MSP430_USB_VBUS
R90 1.5K
MSP430_USB_DP
MSP430_USB_DM
90 ohm diff pair
R91 1M
C92 10pF
C91 10pF
R94 27
R93 27
D4 LL103A
CONN_MSP_USB_DP
CONN_MSP_USB_DN
J19
USBVDD
D+
D-
ID
USBVSS
SHIELD1
SHIELD2
SHIELD3
SHIELD4
C264 4.7uF
C263 0.1uF
R392 100K
C80 0.1uF
U62
VCC
IO1
IO2
NC.2
GND
TPD2E001DRL
R95 1M
USBMINI_B
C93 0.1uF
JP52 HEADER 3
SW12 SW PUSHBUTTON_3
U54
MSP430F5529IPN
P6.3/CB3/A3
P6.2/CB2/A2
P6.1/CB1/A1
P6.0/CB0/A0
RSTN/NMI/SBWTDIO
PJ.3/TCK
PJ.2/TMS
PJ.1/TDI/TLK
PJ.0/TDO
TEST/SBWTCK
P5.3/XT2OUT
P5.2/XT2IN
AVSS2
V18
VUSB
VBUS
PU.1/DM
PUR
PU.0/DP
VSSU
P6.4/CB4/A4
P6.5/CB5/A5
P6.6/CB6/A6
P6.7/CB7/A7
P7.0/CB8/A12
P7.1/CB9/A13
P7.2/CB10/A14
P7.3/CB11/A15
P5.0/A8/VREF+/VEREF+
P5.1/A9/VREF-/VEREF-
AVCC1
P5.4/XIN
P5.5/XOUT
AVSS1
P8.0
P8.1
P8.2
DVCC1
DVSS1
VCORE.1
P7.7/TB0CLK/MCLK
P7.6/TB0.4
P7.5/TB0.3
P7.4/TB0.2
P5.7/TB0.1
P5.6/TB0.0
P4.7/PM_NONE
P4.6/PM_NONE
P4.5/PM_UCA1RXD/PM_UCA1SOMI
P4.4/PM_UCATXD/PM_UCA1SIMO
DVCC2
DVSS2
P4.3/PM_UCB1CLK/PM_UCA1STE
P4.2/PM_UCB1SOMI/PM_UC1SCL
P4.1/PM_UCB1SIMO/PM_UCB1SDA
P4.0/PM_UCB1STE/PM_UCA1CLK
P3.7/TB0OUTH/SVMOUT
P3.6/TB0.6
P3.5/TB0.5
P3.4/UCA0RXD/UCA0SOMI
P1.0/TA0CLK/ACLK
P1.1/TA0.0
P1.2/TA0.1
P1.3/TA0.2
P1.4/TA0.3
P1.5/TA0.4
P1.6/TA1CLK/CBOUT
P1.7/TA1.0
P2.0/TA1.1
P2.1/TA1.2
P2.2/TA2CLK/SMCLK
P2.3/TA2.0
P2.4/TA2.1
P2.5/TA2.2
P2.6/RTCCLK/DMAE0
P2.7/UCB0STE/UCA0CLK
P3.0/UCB0SIM/UCB0SDA
P3.1/UCB0SOMI/UB0SCL
P3.2/UCB0CLK/UCA0STE
P3.3/UCA0TXD/UCA0SIMO
3V3_MSP430
C265 10uF
C247 0.1uF
[9] MSP430_HPI_HDS1
[36,37] MSP430_SPI_DIR
[9] MSP430_HPI_HBE1
[9] MSP430_HPI_HBE0
MSP430_HPI_HDS1
MSP430_SPI_DIR
MSP430_HPI_HBE1
MSP430_HPI_HBE0
[7] MSP430BTM0
[7] MSP430BTM1
[7] MSP430BTM2
[7] MSP430BTM3
[35] MSP430_WAKEUP
[35] MSP430_INT
AVCC1
MSP430_XIN
MSP430_XOUT
C84 22pF
C81 22pF
Y4 32.768KHz
[7] MSP430_DRV_BTMODE
[17] MSP430_DRV_RESETn
[7] MSP430_Z_BTMODEn
C245 0.47uF
MSP430_SWOPT0 [37]
MSP430_SWOPT1 [37]
MSP430_SWOPT2 [37]
MSP430_SWOPT3 [37]
MSP430_PWR_OPT1 [22]
MSP430_PWR_OPT2 [22]
MSP430_PWR_OPT3 [22]
MSP430_PWR_OPT4 [22]
MSP_430_RX_IR_IN [35]
MSP_430_DX_IR_OUT [35]
UART_IR_SEL [35]
MSP430_PIN45
MSP430_PIN41
MSP430_PIN78 R423 220 DS2 LED_0
MSP430_PIN45 R424 220 DS3 LED_0
MSP430_PIN41 R425 220 DS4 LED_0
AVCC1
R382 0
C252 0.1uF
C255 10uF
C254 10uF
C253 0.1uF
R379 4.7K
R380 4.7K
[9] MSP430_HPI_D0
[9] MSP430_HPI_D1
[9] MSP430_HPI_D2
[9] MSP430_HPI_D3
[9] MSP430_HPI_D4
[9] MSP430_HPI_D5
[9] MSP430_HPI_D6
[9] MSP430_HPI_D7
[9] MSP430_HPI_D8
[9] MSP430_HPI_D9
[9] MSP430_HPI_D10
[9] MSP430_HPI_D11
[9] MSP430_HPI_D12
[9] MSP430_HPI_D13
[9] MSP430_HPI_D14
[9] MSP430_HPI_D15
MSP430_SPI_CS0 [36]
MSP430_SPI_CLK [36]
MSP430_SPI_RX [36]
MSP430_SPI_DX [36]
MSP430_I2C_SCL [22,24]
MSP430_I2C_SDA [22,24]
MSP430_HPI_ON
MSP430_HPI_ON [8]
MSP430_HPI_CONN [9]
MSP430_SPI_OEn
MSP430_SPI_OEn [36,37]
5
4
3
2
1
D
C
B
A

SPECTRUM DIGITAL INCORPORATED

Title: TMS320C5517 EVALUATION MODULE

Page Contents: MSP430

Size:B DWG NO 514662-0001 Revision: D

Date: Friday, January 03, 2014 Sheet 34 of 39

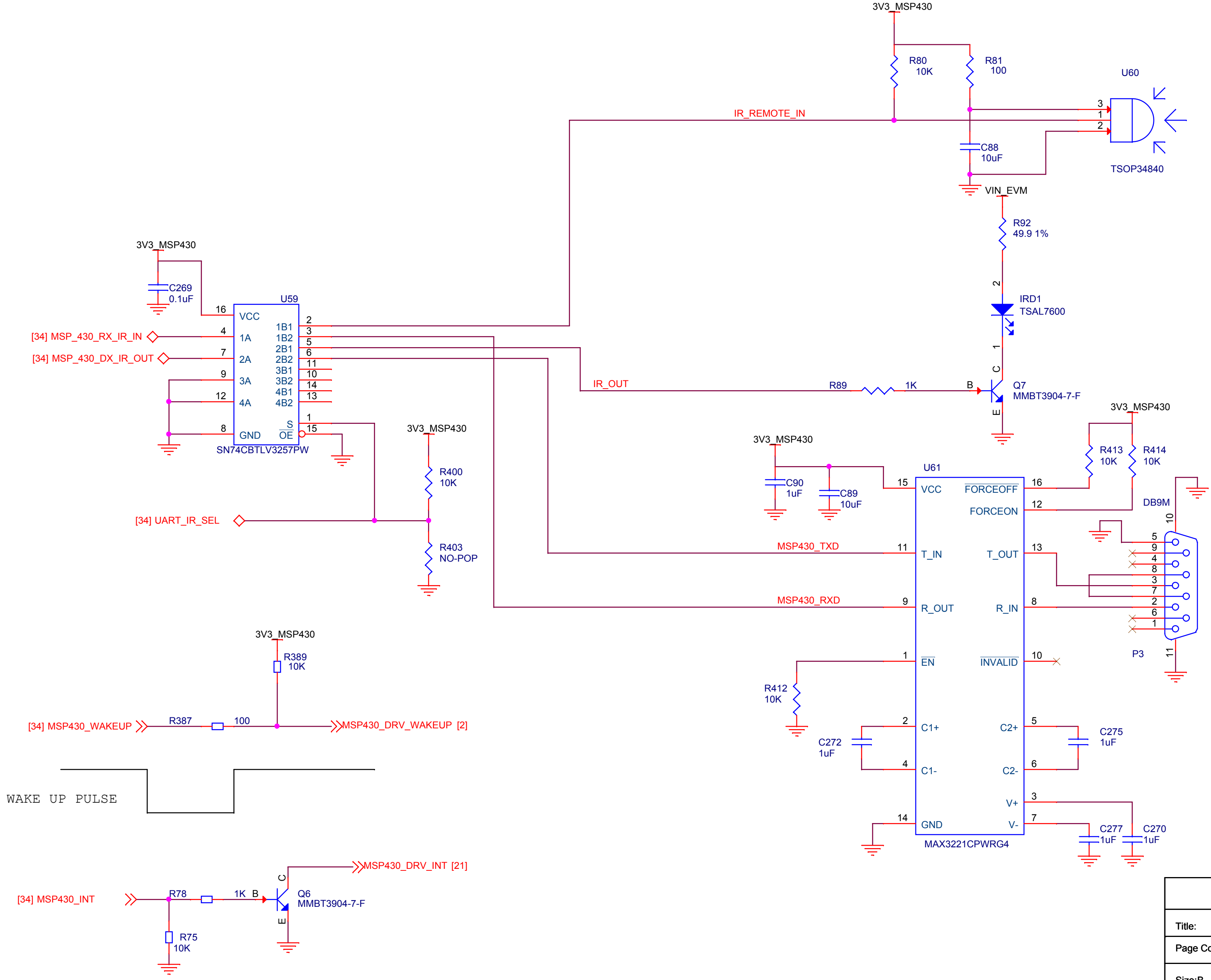
3V3_MSP430
R80
10K
R81
100
U60
IR_REMOTE_IN
3
1
2
C88
10uF
TSOP34840
VIN_EVM
R92
49.9 1%
2
IRD1
TSAL7600
1
C
Q7
MMBT3904-7-F
E
B
IR_OUT
R89
1K
3V3_MSP430
C269
0.1uF
U59
16
VCC
[34] MSP_430_RX_IR_IN
4
1A
[34] MSP_430_DX_IR_OUT
7
2A
9
3A
12
4A
8
GND
1B1
1B2
2B1
2B2
3B1
3B2
4B1
4B2
S
OE
2
3
5
6
11
10
14
13
1
15
SN74CBTLV3257PW
3V3_MSP430
R400
10K
[34] UART_IR_SEL
R403
NO-POP
3V3_MSP430
C90
1uF
C89
10uF
U61
15
VCC
FORCEOFF
16
FORCEON
12
3V3_MSP430
R413
10K
R414
10K
DB9M
10
5
9
4
8
3
7
2
6
1
11
P3
MSP430_TXD
11
T_IN
T_OUT
13
MSP430_RXD
9
R_OUT
R_IN
8
1
EN
INVALID
10
R412
10K
2
C1+
C2+
5
C272
1uF
C275
1uF
4
C1-
C2-
6
V+
3
14
GND
V-
7
C277
1uF
C270
1uF
MAX3221CPWRG4
3V3_MSP430
R389
10K
[34] MSP430_WAKEUP
R387
100
MSP430_DRV_WAKEUP [2]
WAKE UP PULSE
MSP430_DRV_INT [21]
C
[34] MSP430_INT
R78
1K
B
Q6
MMBT3904-7-F
E
R75
10K

SPECTRUM DIGITAL INCORPORATED

Title: TMS320C5517 EVALUATION MODULE

Page Contents: MSP430 GLUE

Size:B DWG NO 514662-0001 Revision: A

Date: Friday, January 03, 2014 Sheet 35 of 39

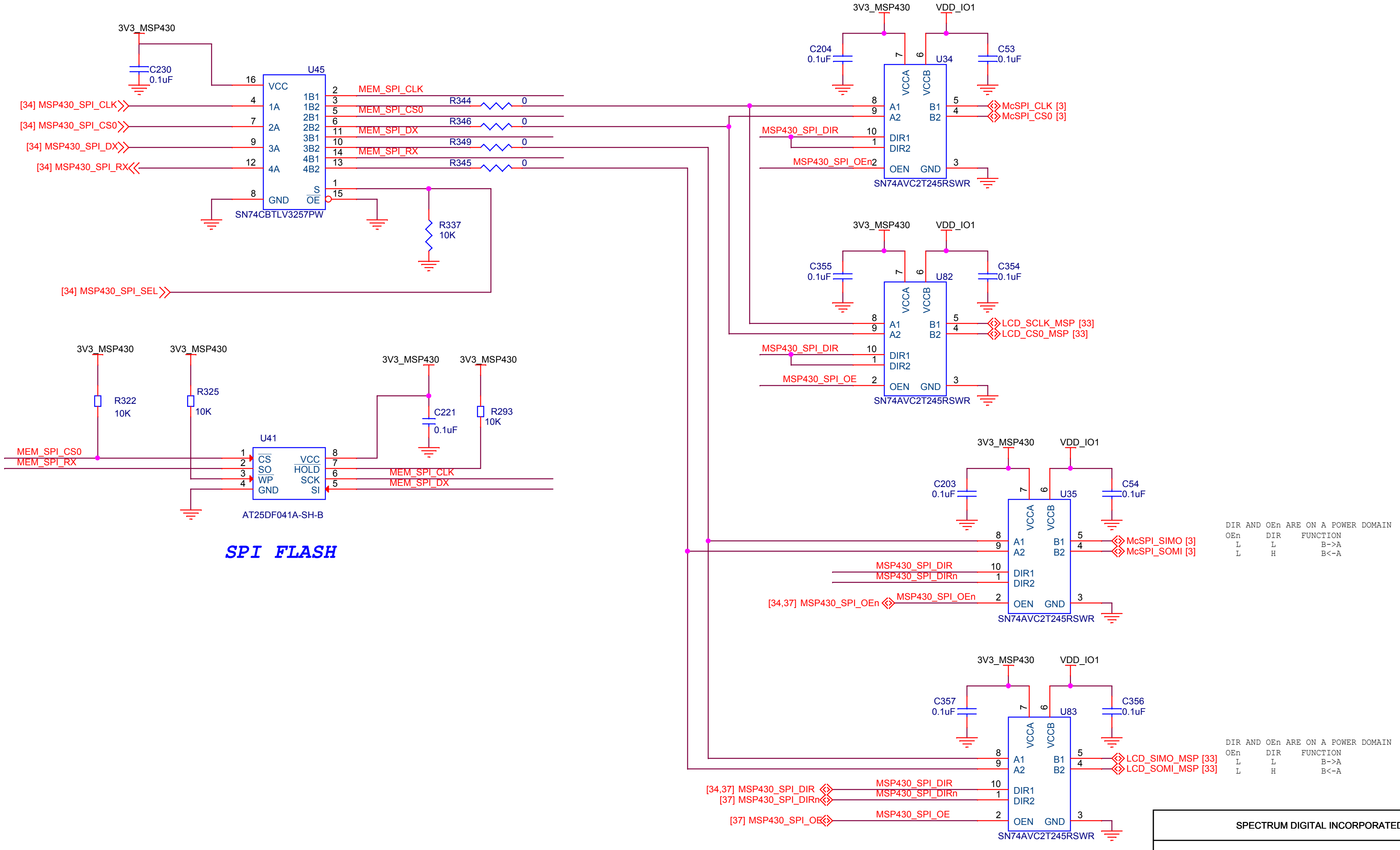
3V3_MSP430
C230
0.1uF
U45
VCC
16
[34] MSP430_SPI_CLK
[34] MSP430_SPI_CS0
[34] MSP430_SPI_DX
[34] MSP430_SPI_RX
1A
2A
3A
4A
1B1
1B2
2B1
2B2
3B1
3B2
4B1
4B2
GND
S
OE
SN74CBTLV3257PW
MEM_SPI_CLK
MEM_SPI_CS0
MEM_SPI_DX
MEM_SPI_RX
R344 0
R346 0
R349 0
R345 0
R337
10K
[34] MSP430_SPI_SEL
3V3_MSP430
VDD_IO1
C204
0.1uF
C53
0.1uF
U34
VCCA
VCCB
A1
A2
B1
B2
DIR1
DIR2
OEN
GND
MSP430_SPI_DIR
MSP430_SPI_OEn
McSPI_CLK [3]
McSPI_CS0 [3]
SN74AVC2T245RSWR
C355
0.1uF
C354
0.1uF
U82
LCD_SCLK_MSP [33]
LCD_CS0_MSP [33]
MSP430_SPI_DIR
MSP430_SPI_OE
SN74AVC2T245RSWR
R322
10K
R325
10K
3V3_MSP430
C221
0.1uF
R293
10K
U41
MEM_SPI_CS0
MEM_SPI_RX
CS
SO
WP
GND
VCC
HOLD
SCK
SI
MEM_SPI_CLK
MEM_SPI_DX
AT25DF041A-SH-B
SPI FLASH
C203
0.1uF
C54
0.1uF
U35
McSPI_SIMO [3]
McSPI_SOMI [3]
MSP430_SPI_DIR
MSP430_SPI_DIRn
MSP430_SPI_OEn
[34,37] MSP430_SPI_OEn
SN74AVC2T245RSWR
DIR AND OEn ARE ON A POWER DOMAIN
OEn DIR FUNCTION
L L B->A
L H B<-A
C357
0.1uF
C356
0.1uF
U83
LCD_SIMO_MSP [33]
LCD_SOMI_MSP [33]
[34,37] MSP430_SPI_DIR
[37] MSP430_SPI_DIRn
[37] MSP430_SPI_OE
MSP430_SPI_DIR
MSP430_SPI_DIRn
MSP430_SPI_OE
SN74AVC2T245RSWR
DIR AND OEn ARE ON A POWER DOMAIN
OEn DIR FUNCTION
L L B->A
L H B<-A

SPECTRUM DIGITAL INCORPORATED

Title: TMS320C5517 EVALUATION MODULE

Page Contents: MSP430 SPI

Size:B
DWG NO 514662-0001
Revision: D

Date: Friday, January 03, 2014
Sheet 36 of 39

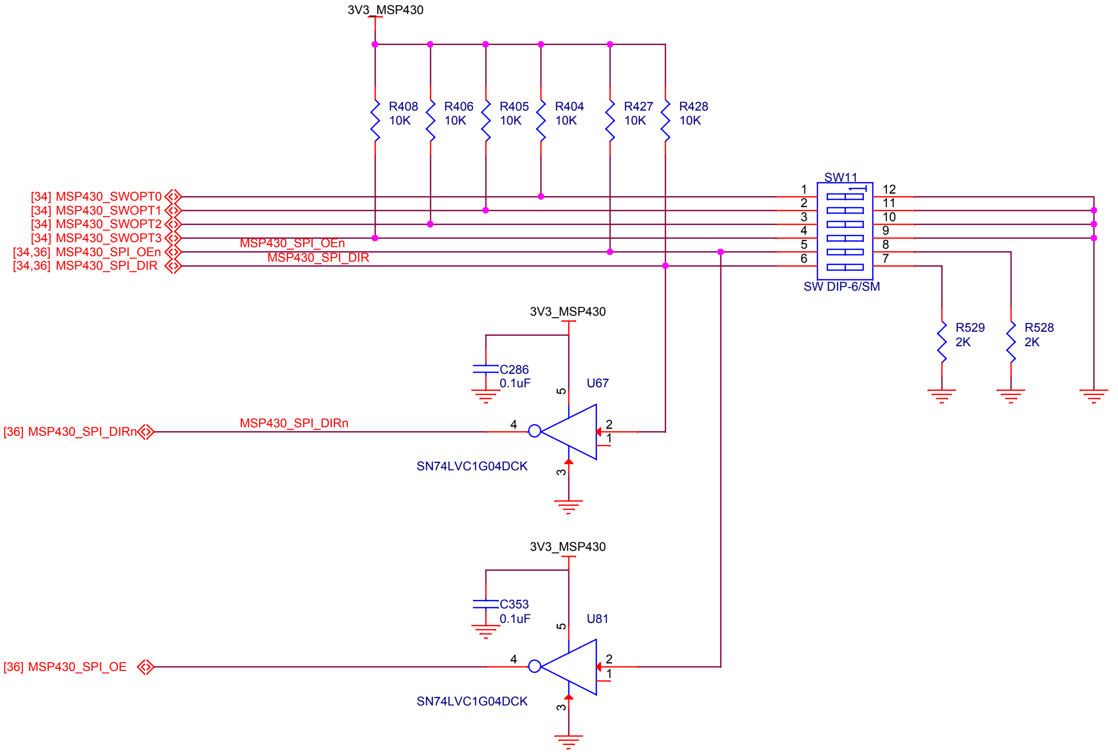
3V3_MSP430
R408
10K
R406
10K
R405
10K
R404
10K
R427
10K
R428
10K
SW11
SW DIP-6/SM
1
2
3
4
5
6
12
11
10
9
8
7
[34] MSP430_SWOPT0
[34] MSP430_SWOPT1
[34] MSP430_SWOPT2
[34] MSP430_SWOPT3
[34,36] MSP430_SPI_OEn
[34,36] MSP430_SPI_DIR
MSP430_SPI_OEn
MSP430_SPI_DIR
R529
2K
R528
2K
3V3_MSP430
C286
0.1uF
U67
5
4
2
1
3
[36] MSP430_SPI_DIRn
MSP430_SPI_DIRn
SN74LVC1G04DCK
3V3_MSP430
C353
0.1uF
U81
5
4
2
1
3
[36] MSP430_SPI_OE
SN74LVC1G04DCK

SPECTRUM DIGITAL INCORPORATED

Title: TMS320C5517 EVALUATION MODULE

Page Contents: MSP430 OPTION SW

Size:B	DWG NO 514662-0001	Revision: D
Date: Friday, January 03, 2014	Sheet 37 of 39	

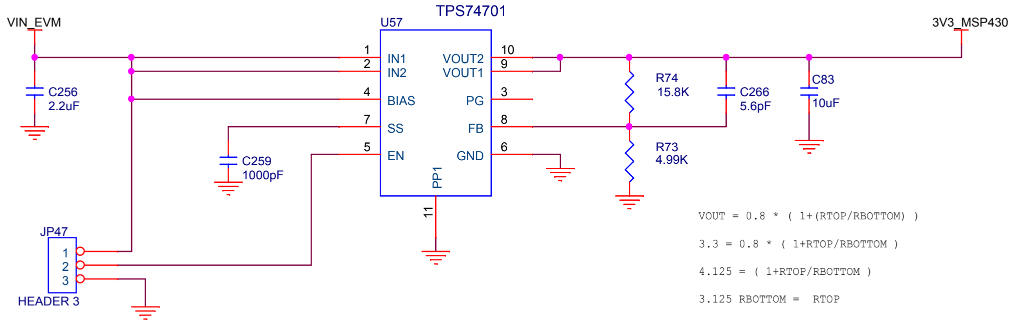
VIN_EVM
C256
2.2uF
U57
TPS74701
1
2
4
7
5
IN1
IN2
BIAS
SS
EN
VOUT2
VOUT1
PG
FB
GND
PP1
10
9
3
8
6
11
C259
1000pF
R74
15.8K
R73
4.99K
C266
5.6pF
C83
10uF
3V3_MSP430
JP47
1
2
3
HEADER 3

VOUT = 0.8 * (1+(RTOP/RBOTTOM))

3.3 = 0.8 * (1+RTOP/RBOTTOM)

4.125 = (1+RTOP/RBOTTOM)

3.125 RBOTTOM = RTOP

SPECTRUM DIGITAL INCORPORATED		
Title: TMS320C5517 EVALUATION MODULE		
Page Contents: MSP430 POWER		
Size:B	DWG NO 514662-0001	Revision: A
Date: Friday, January 03, 2014	Sheet 38 of 39	

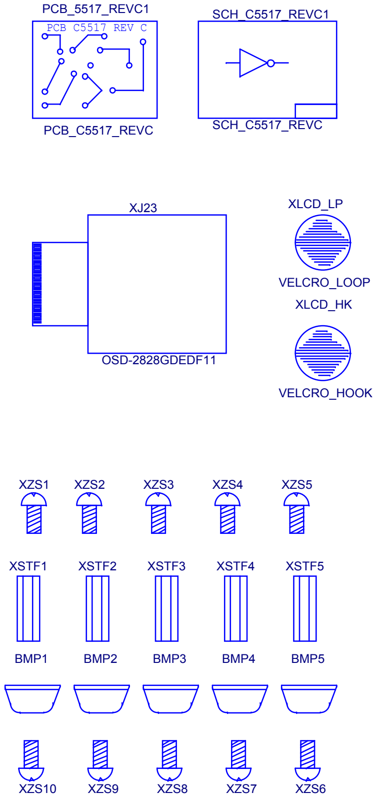
PCB_5517_REVC1
PCB C5517 REV C
PCB_C5517_REVC
SCH_C5517_REVC1
SCH_C5517_REVC
XJ23
OSD-2828GDEDF11
XLCD_LP
VELCRO_LOOP
XLCD_HK
VELCRO_HOOK
XZS1
XZS2
XZS3
XZS4
XZS5
XSTF1
XSTF2
XSTF3
XSTF4
XSTF5
BMP1
BMP2
BMP3
BMP4
BMP5
XZS10
XZS9
XZS8
XZS7
XZS6

SPECTRUM DIGITAL INCORPORATED

Title: TMS320C5517 EVALUATION MODULE

Page Contents: ACCESSORIES/REVISION HISTORY

Size:B DWG NO 514662-0001 Revision: B

Date: Friday, January 03, 2014 Sheet 39 of 39