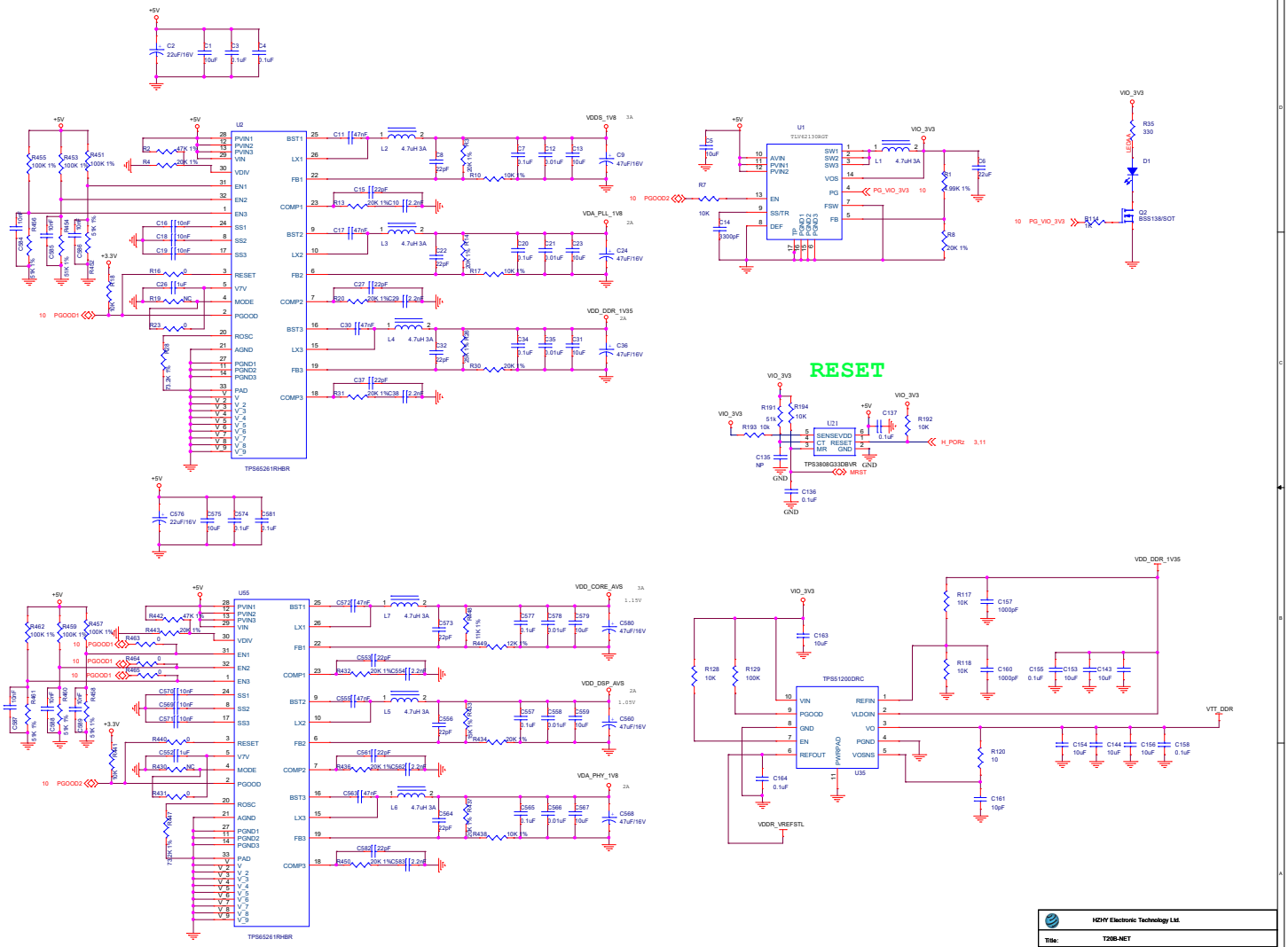

HZHY Electronic Technology Ltd.	
Title:	T20B-NET
Page Contents:	<Page Name>
Size:C	Doc No / Revision: 0.0
Date: Thursday, August 15, 2019	Sheet 10 of 11