THIS DOCUMENT AND THE DATA DISCLOSED HEREIN OR HEREWITH IS THE PROPERTY OF ALTIUM LIMITED AND MAY BE FREELY DISTRIBUTED IN WHOLE. NO RIGHTS ARE RESERVED OR EXPRESS OR IMPLIED WARANTEE GIVEN.

REVISION	DESCRIPTION	DATE	APPROVED
V00	MCU_OSPI	26-07-2026	

OSPI FLASH INTERFACE

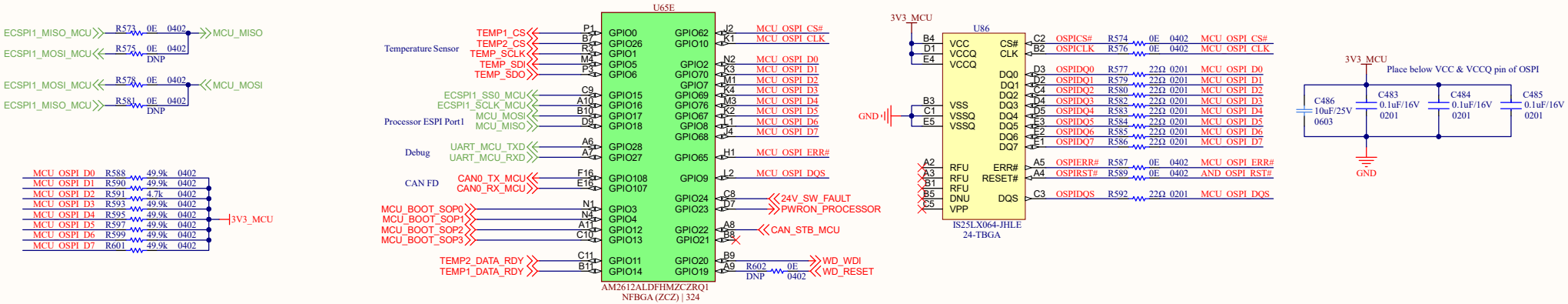

MCU BOOT MODE SELECTION SWITCH

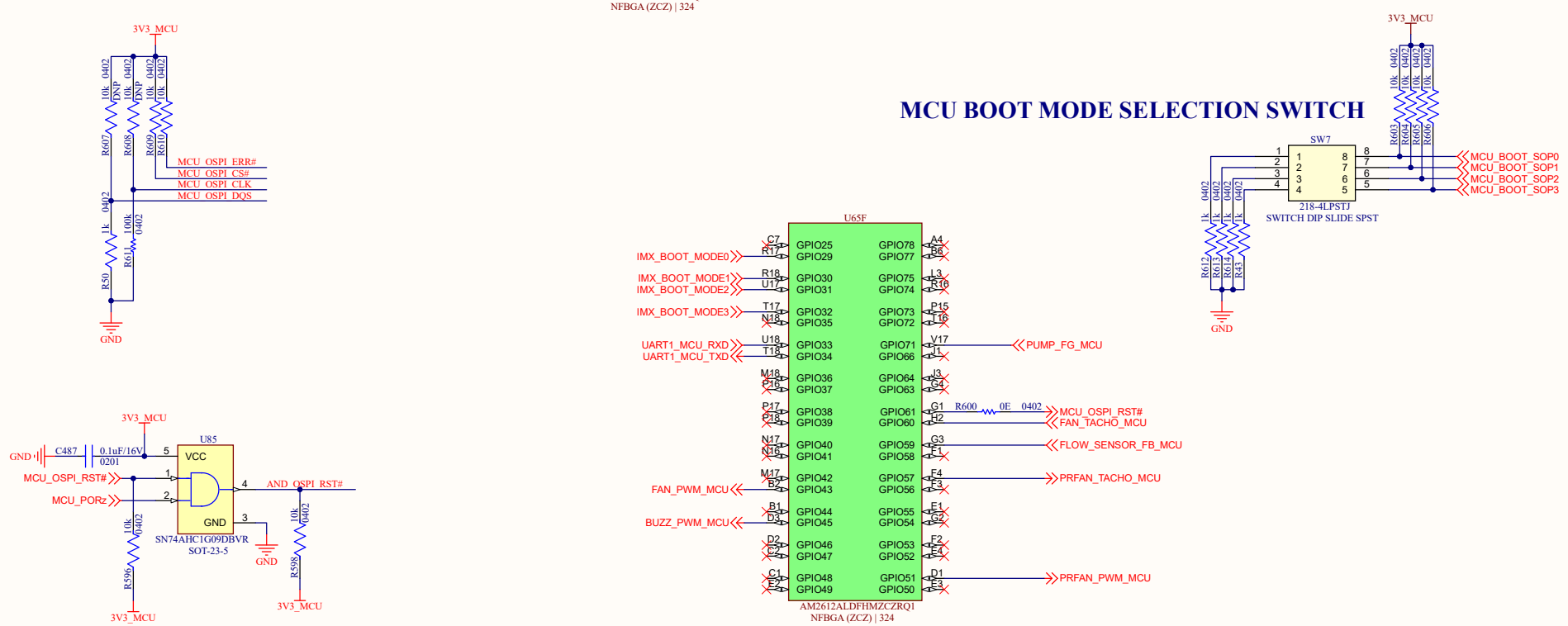

CHANGE HISTORY:

REVISION	AUTHOR	REVIEWER	DATE	CHANGE NO.
V00	Vighnesh	Chiheb,Msreedharan	26-07-2026	-

PRODUCT: Dornier MedTech

TITLE: LOGIC BOARD

ID: K -SCH-01S-00