SoC DDR INTERFACE

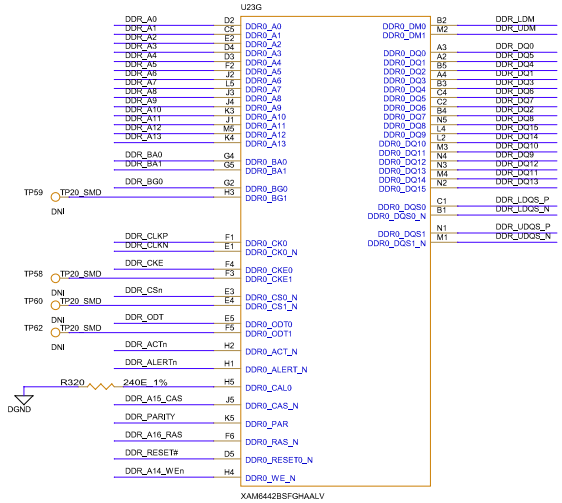

DDR DQ Lines Swapped With Data Byte

DDR4 DEVICE

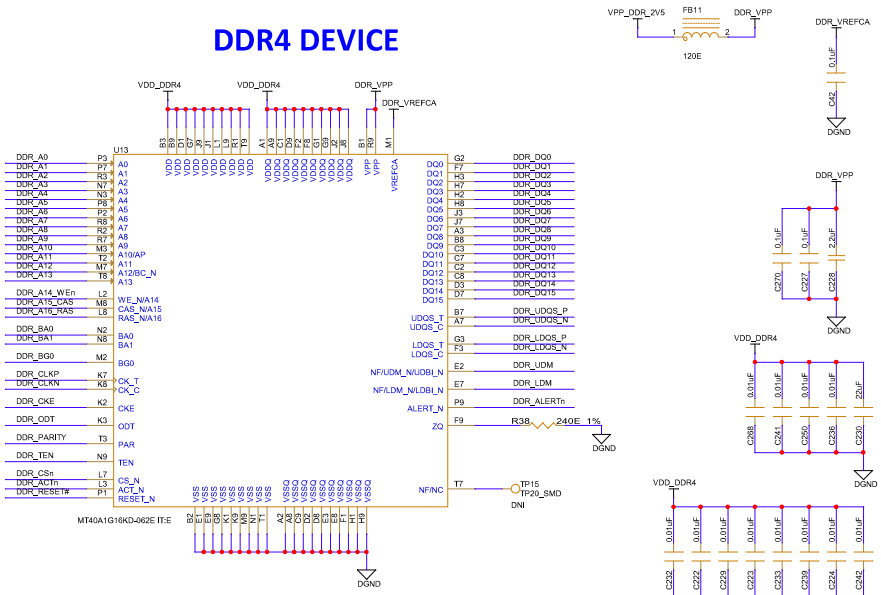

DDR TERMINATION

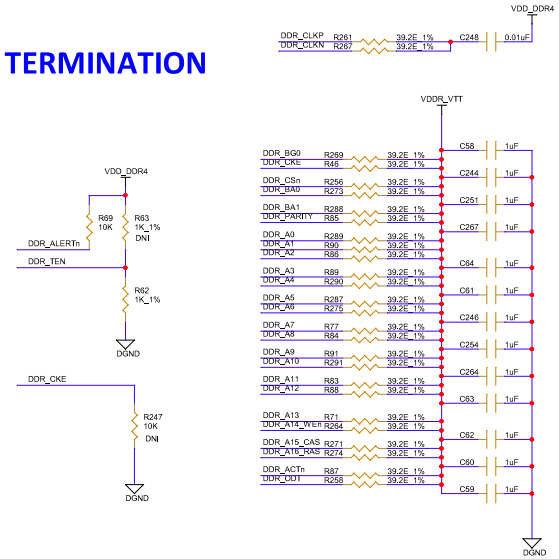

Designed for TI by Mistral Solutions Pvt Ltd

Title	DDR INTERFACE		
Size	Variant Name = <Core Design>		Rev
C			E2
Date:	Wednesday, July 30, 2025	Sheet 12 of 40	