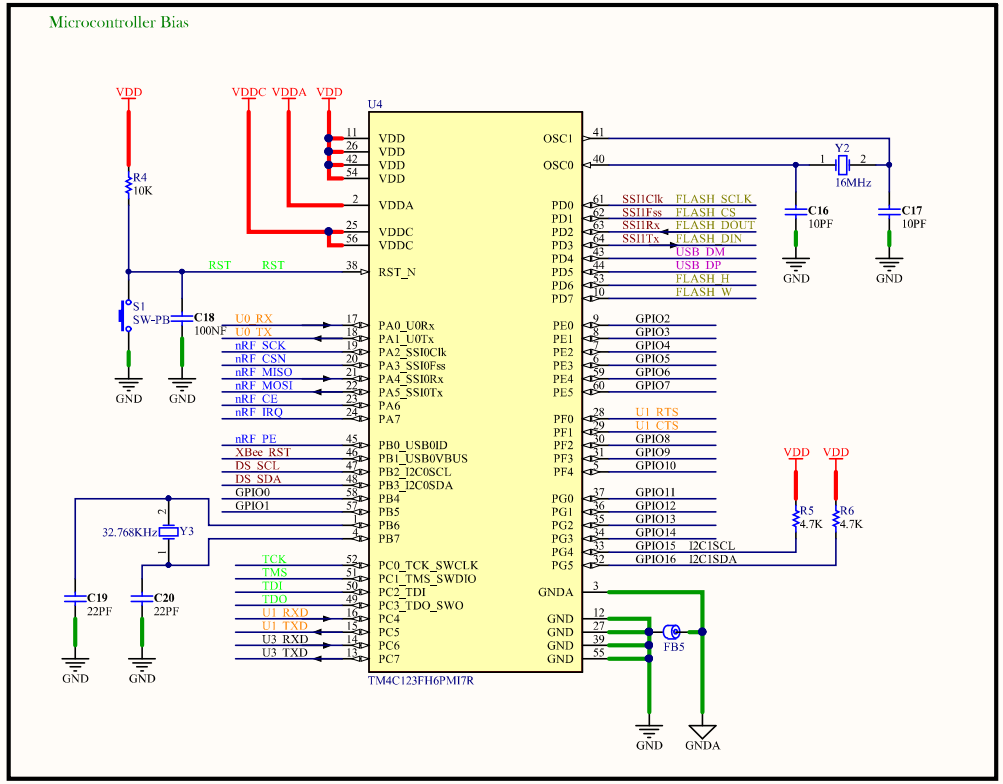

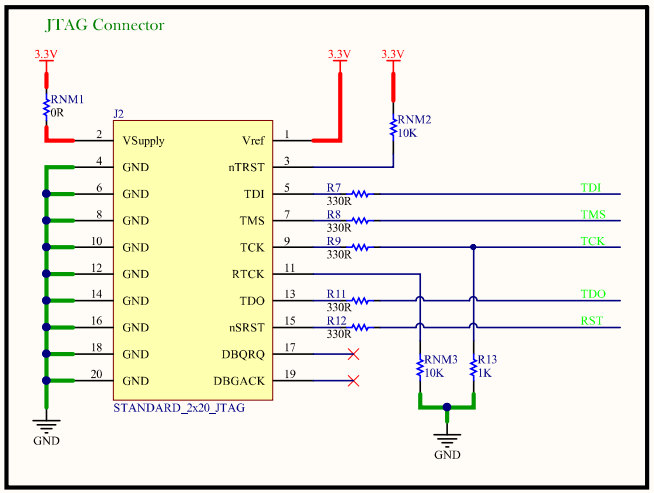

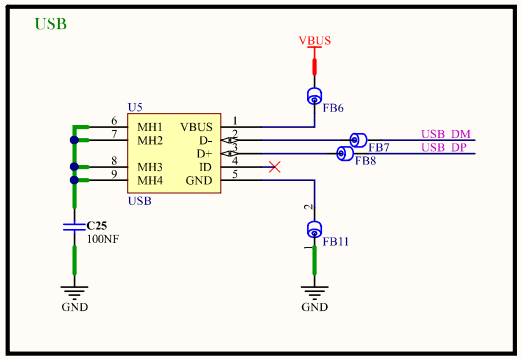

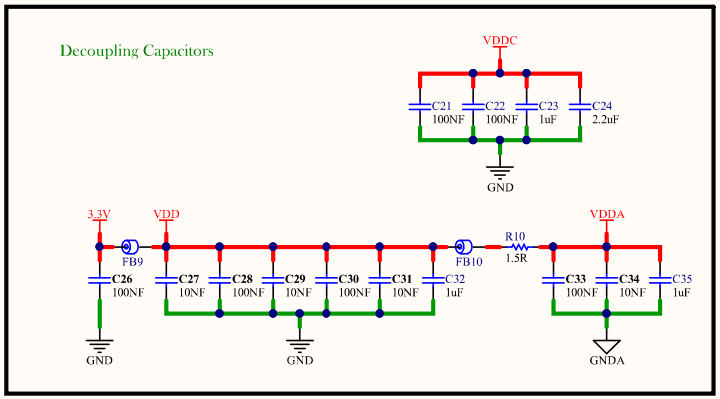

Title	Main Sheet	
Size A3	Number	Revision
Date: 15/10/07	Sheet of	
File: E:\Work\...\Main.SchDoc	Drawn By: Siyavash Asadi	