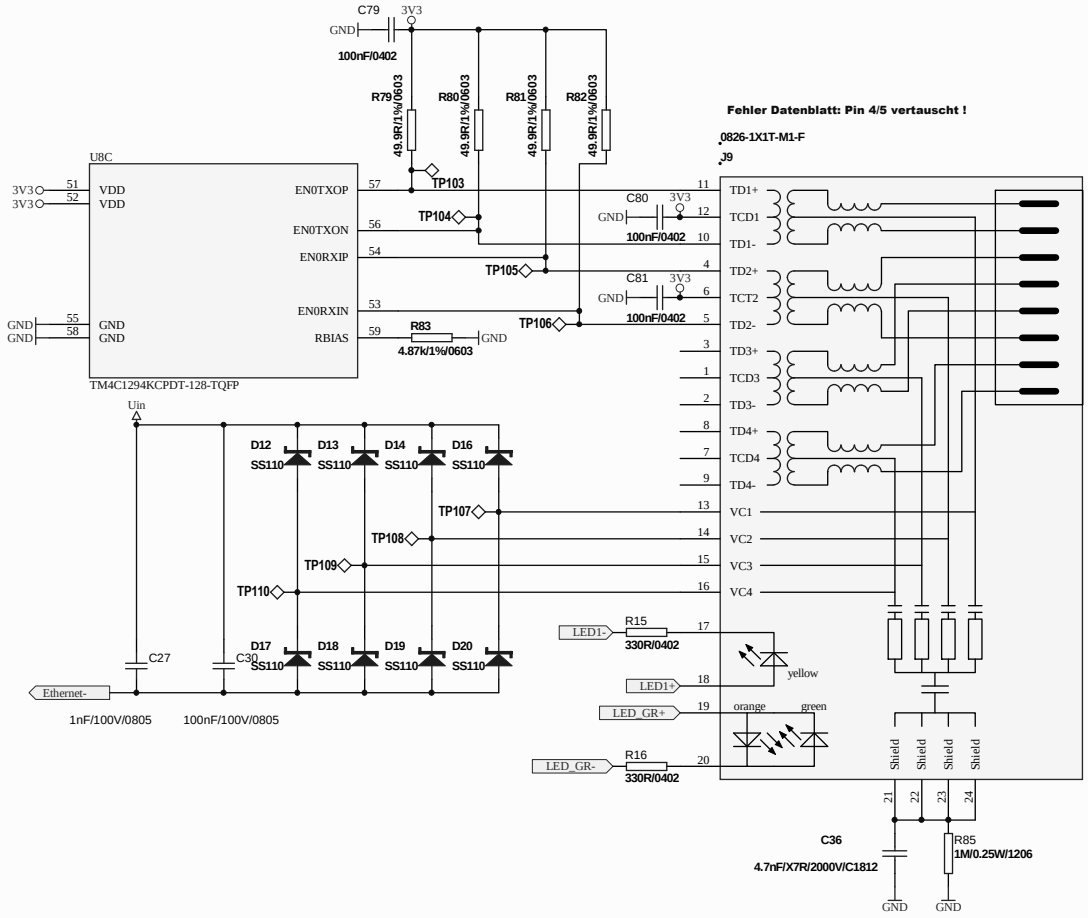

not assembled

Title			
Rondo Step Ethernet			*Lionpower GmbH* *Rothornstr. 9* *CH-3855 Brienz* *Tel. ++41 33 951 13 86* *info@lionpower.ch*
Number:	Revision: 2.0	Sheet 2 of 5	Date: 13.11.2015 Time: 16:22:07
File: C:\Eigene_Dateien_D\projekte\Rondo\Altium_1\schema\RondoStep_Ethernet.SchDoc			

Lionpower