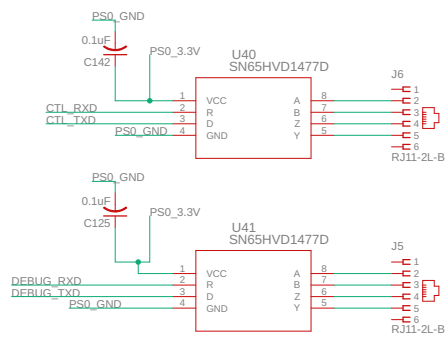
PS0_GND
0.1uF
C142
PS0_3.3V
U40
SN65HVD1477D
J6
CTL_RXD
CTL_TXD
PS0_GND
VCC
R
D
GND
A
B
Z
Y
RJ11-2L-B
PS0_GND
0.1uF
C125
PS0_3.3V
U41
SN65HVD1477D
J5
DEBUG_RXD
DEBUG_TXD
PS0_GND
RJ11-2L-B

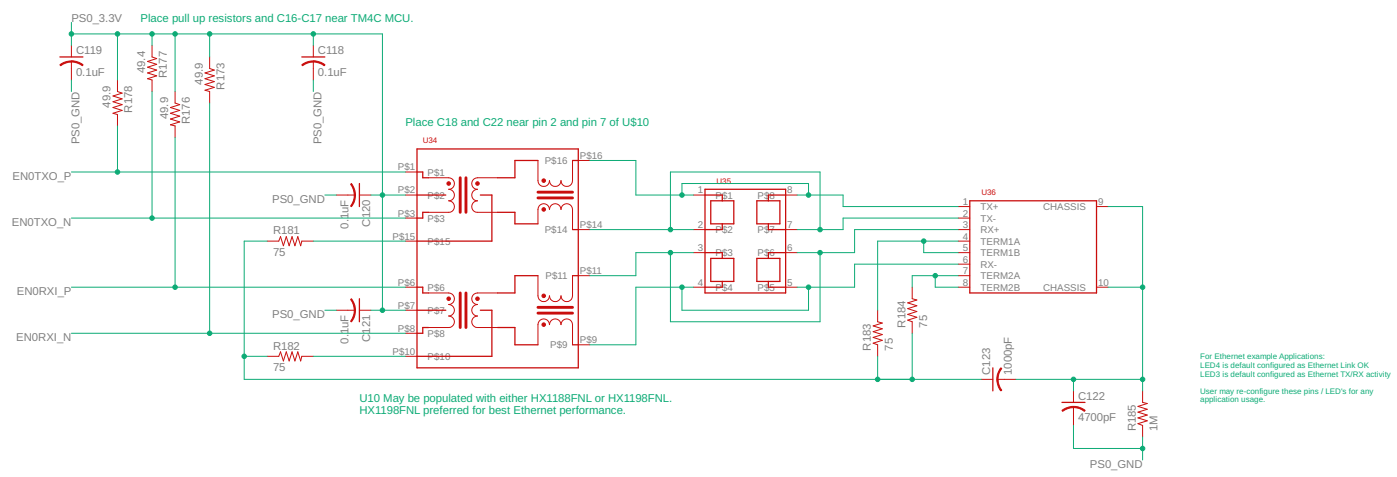
PS0_3.3V
Place pull up resistors and C16-C17 near TM4C MCU.
C119
0.1uF
C118
0.1uF
PS0_GND
Place C18 and C22 near pin 2 and pin 7 of U$10
U34
EN0TXO_P
EN0TXO_N
EN0RXI_P
EN0RXI_N
PS0_GND
R181
75
R182
75
U35
U36
TX+
TX-
RX+
TERM1A
TERM1B
RX-
TERM2A
TERM2B
CHASSIS
R183
75
R184
75
C123
1000pF
C122
4700pF
R185
1M
PS0_GND
For Ethernet example Applications:
LED4 is default configured as Ethernet Link OK
LED3 is default configured as Ethernet TX/RX activity
User may re-configure these pins / LED's for any application usage.
U10 May be populated with either HX1188FNL or HX1198FNL.
HX1198FNL preferred for best Ethernet performance.

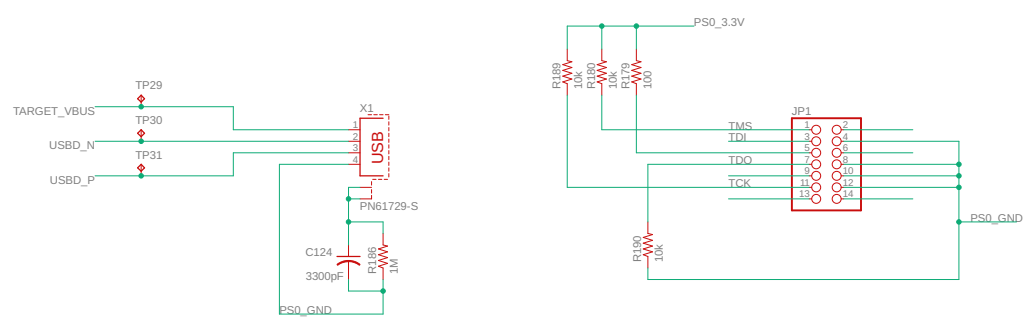
TP29
TARGET_VBUS
TP30
USBD_N
TP31
USBD_P
X1
USB
PN61729-S
C124
3300pF
R186
1M
PS0_GND
PS0_3.3V
R189
1K
R180
10k
R179
100
JP1
TMS
TDI
TDO
TCK
R190
10k
PS0_GND

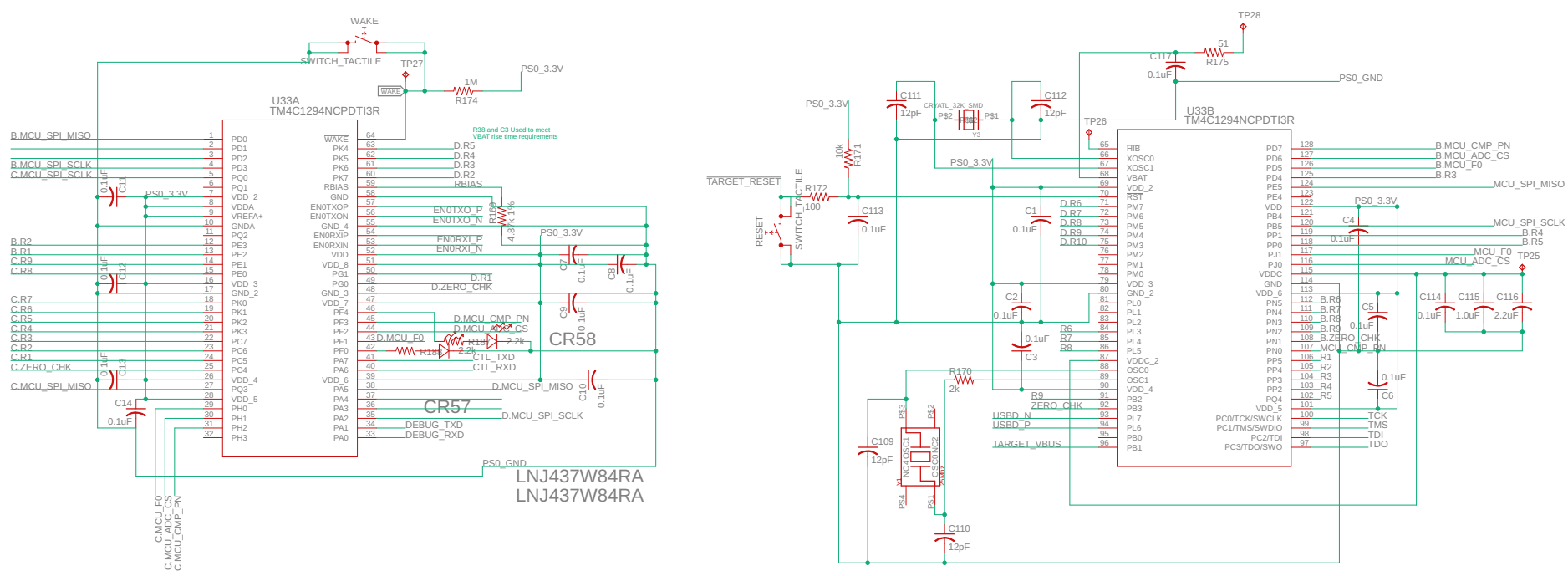
WAKE
SWITCH_TACTILE
TP27
PS0_3.3V
1M
R174
U33A
TM4C1294NCPDTI3R
B.MCU_SPI_MISO
B.MCU_SPI_SCLK
C.MCU_SPI_SCLK
B.R2
B.R1
C.R9
C.R8
C.R7
C.R6
C.R5
C.R4
C.R3
C.R2
C.R1
C.ZERO_CHK
C.MCU_SPI_MISO
R38 and C3 Used to meet VBAT rise time requirements
D.R5
D.R4
D.R3
D.R2
RBIAS
EN0TXO_P
EN0TXO_N
EN0RXI_P
EN0RXI_N
D.R1
D.ZERO_CHK
D.MCU_CMP_PN
D.MCU_ADC_CS
D.MCU_F0
CTL_TXD
CTL_RXD
D.MCU_SPI_MISO
D.MCU_SPI_SCLK
DEBUG_TXD
DEBUG_RXD
CR58
CR57
LNJ437W84RA
LNJ437W84RA
PS0_GND
C.MCU_F0
C.MCU_ADC_CS
C.MCU_CMP_PN
TP28
C117
0.1uF
51
R175
PS0_GND
PS0_3.3V
C111
12pF
CRYATL_32K_SMD
C112
12pF
TP26
U33B
TM4C1294NCPDTI3R
TARGET_RESET
R172
100
C113
0.1uF
RESET
SWITCH_TACTILE
R171
10k
B.MCU_CMP_PN
B.MCU_ADC_CS
B.MCU_F0
B.R3
MCU_SPI_MISO
MCU_SPI_SCLK
B.R4
B.R5
MCU_F0
MCU_ADC_CS
TP25
C114
0.1uF
C115
1.0uF
C116
2.2uF
R170
2k
C109
12pF
C110
12pF
USBD_N
USBD_P
TARGET_VBUS
R9
ZERO_CHK
TCK
TMS
TDI
TDO

703W-00/54
F1
EARTH
ECE05US05
ACN
ACL
+VOUT
-VOUT
NC
PS1
PS0_5V
PS0_GND
U38
IN
OUT
ADJ/GND
AZ1117EH-3.3TRG1
PS0_3.3V
C126
0.1uF
C127
0.1uF