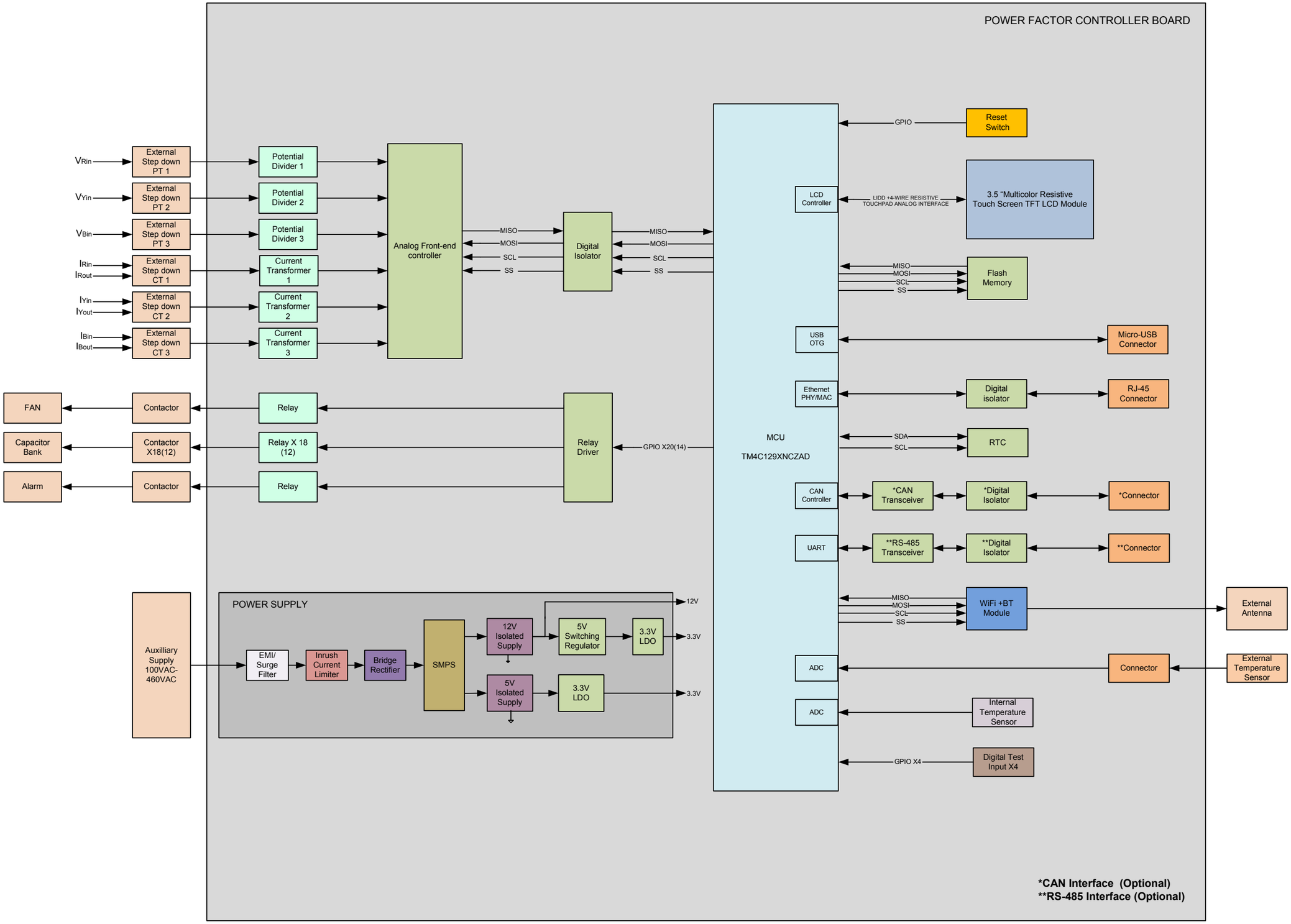BLOCK DIAGRAM OF POWER FACTOR CONTROLLER