WLAN

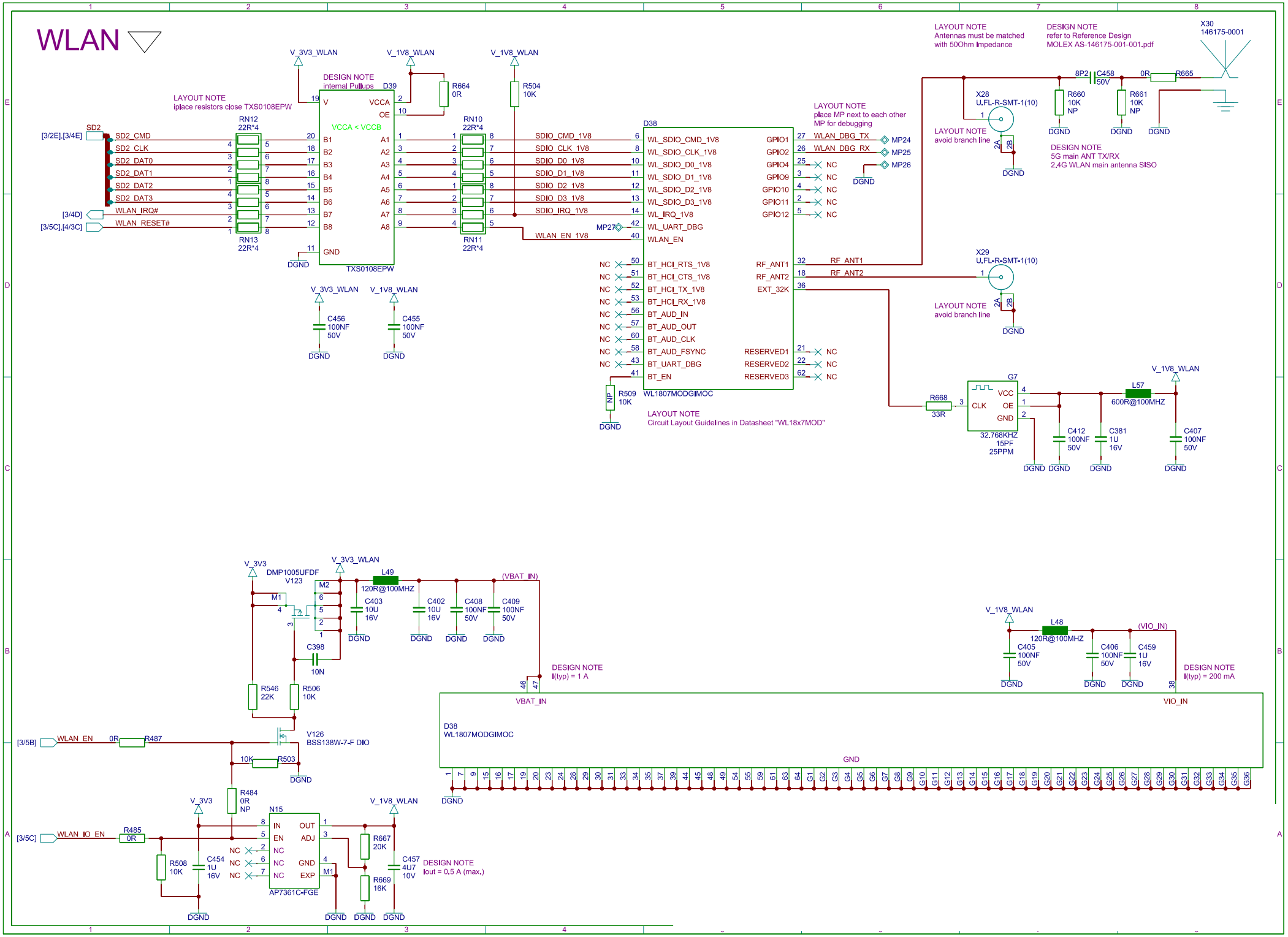
V_3V3_WLAN
V_1V8_WLAN
DESIGN NOTE
internal Pullups
D39
R664
0R
R504
10K
LAYOUT NOTE
iplace resistors close TXS0108EPW
RN12
22R*4
RN13
22R*4
RN10
22R*4
RN11
22R*4
SD2
[3/2E],[3/4E]
SD2_CMD
SD2_CLK
SD2_DAT0
SD2_DAT1
SD2_DAT2
SD2_DAT3
[3/4D]
WLAN_IRQ#
[3/5C],[4/3C]
WLAN_RESET#
VCCA < VCCB
V
VCCA
OE
GND
TXS0108EPW
DGND
SDIO_CMD_1V8
SDIO_CLK_1V8
SDIO_D0_1V8
SDIO_D1_1V8
SDIO_D2_1V8
SDIO_D3_1V8
SDIO_IRQ_1V8
WLAN_EN_1V8
MP27
D38
WL_SDIO_CMD_1V8
WL_SDIO_CLK_1V8
WL_SDIO_D0_1V8
WL_SDIO_D1_1V8
WL_SDIO_D2_1V8
WL_SDIO_D3_1V8
WL_IRQ_1V8
WL_UART_DBG
WLAN_EN
BT_HCI_RTS_1V8
BT_HCI_CTS_1V8
BT_HCI_TX_1V8
BT_HCI_RX_1V8
BT_AUD_IN
BT_AUD_OUT
BT_AUD_CLK
BT_AUD_FSYNC
BT_UART_DBG
BT_EN
GPIO1
GPIO2
GPIO4
GPIO9
GPIO10
GPIO11
GPIO12
RF_ANT1
RF_ANT2
EXT_32K
RESERVED1
RESERVED2
RESERVED3
WLAN_DBG_TX
WLAN_DBG_RX
MP24
MP25
MP26
NC
R509
10K
NP
WL1807MODGIMOC
LAYOUT NOTE
place MP next to each other
MP for debugging
LAYOUT NOTE
Circuit Layout Guidelines in Datasheet "WL18x7MOD"
LAYOUT NOTE
Antennas must be matched
with 50Ohm Impedance
DESIGN NOTE
refer to Reference Design
MOLEX AS-146175-001-001.pdf
X30
146175-0001
X28
U.FL-R-SMT-1(10)
LAYOUT NOTE
avoid branch line
8P2
C458
50V
0R
R665
R660
10K
NP
R661
10K
NP
DESIGN NOTE
5G main ANT TX/RX
2.4G WLAN main antenna SISO
X29
U.FL-R-SMT-1(10)
C456
100NF
50V
C455
100NF
50V
R668
33R
G7
VCC
CLK
OE
GND
32.768KHZ
15PF
25PPM
L57
600R@100MHZ
C412
100NF
50V
C381
1U
16V
C407
100NF
50V
V_3V3
DMP1005UFDF
V123
M1
M2
L49
120R@100MHZ
(VBAT_IN)
C403
10U
16V
C402
10U
16V
C408
100NF
50V
C409
100NF
50V
C398
10N
R546
22K
R506
10K
DESIGN NOTE
I(typ) = 1 A
VBAT_IN
[3/5B]
WLAN_EN
0R
R487
V126
BSS138W-7-F DIO
10K
R503
R484
0R
NP
[3/5C]
WLAN_IO_EN
R485
0R
R508
10K
C454
1U
16V
N15
IN
EN
NC
OUT
ADJ
GND
EXP
AP7361C-FGE
R667
20K
R669
16K
C457
4U7
10V
DESIGN NOTE
Iout = 0.5 A (max.)
L48
120R@100MHZ
(VIO_IN)
C405
100NF
50V
C406
100NF
50V
C459
1U
16V
DESIGN NOTE
I(typ) = 200 mA
VIO_IN
D38
WL1807MODGIMOC
GND