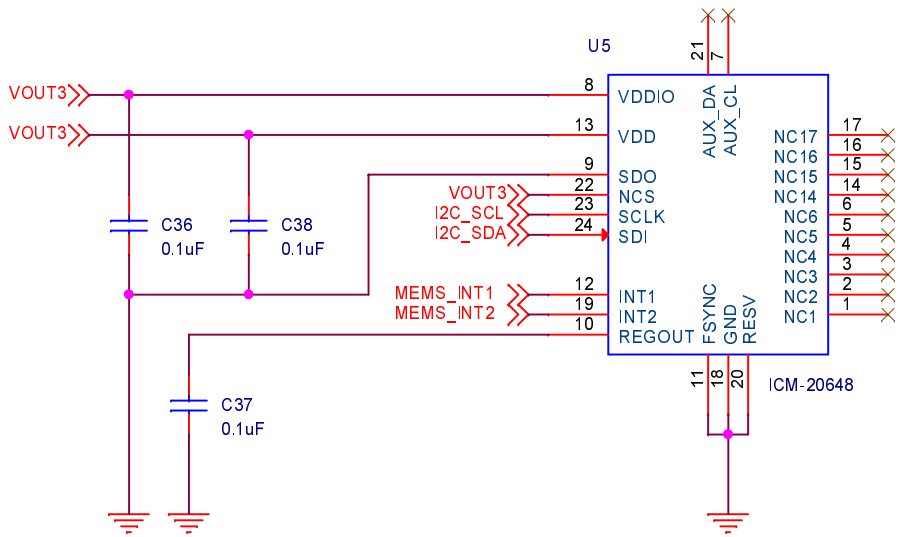

Title	<Title>	
Size A	Document Number <Doc>	Rev <RevCode>
Date: Wednesday, January 04, 2017	Sheet 1 of 1	

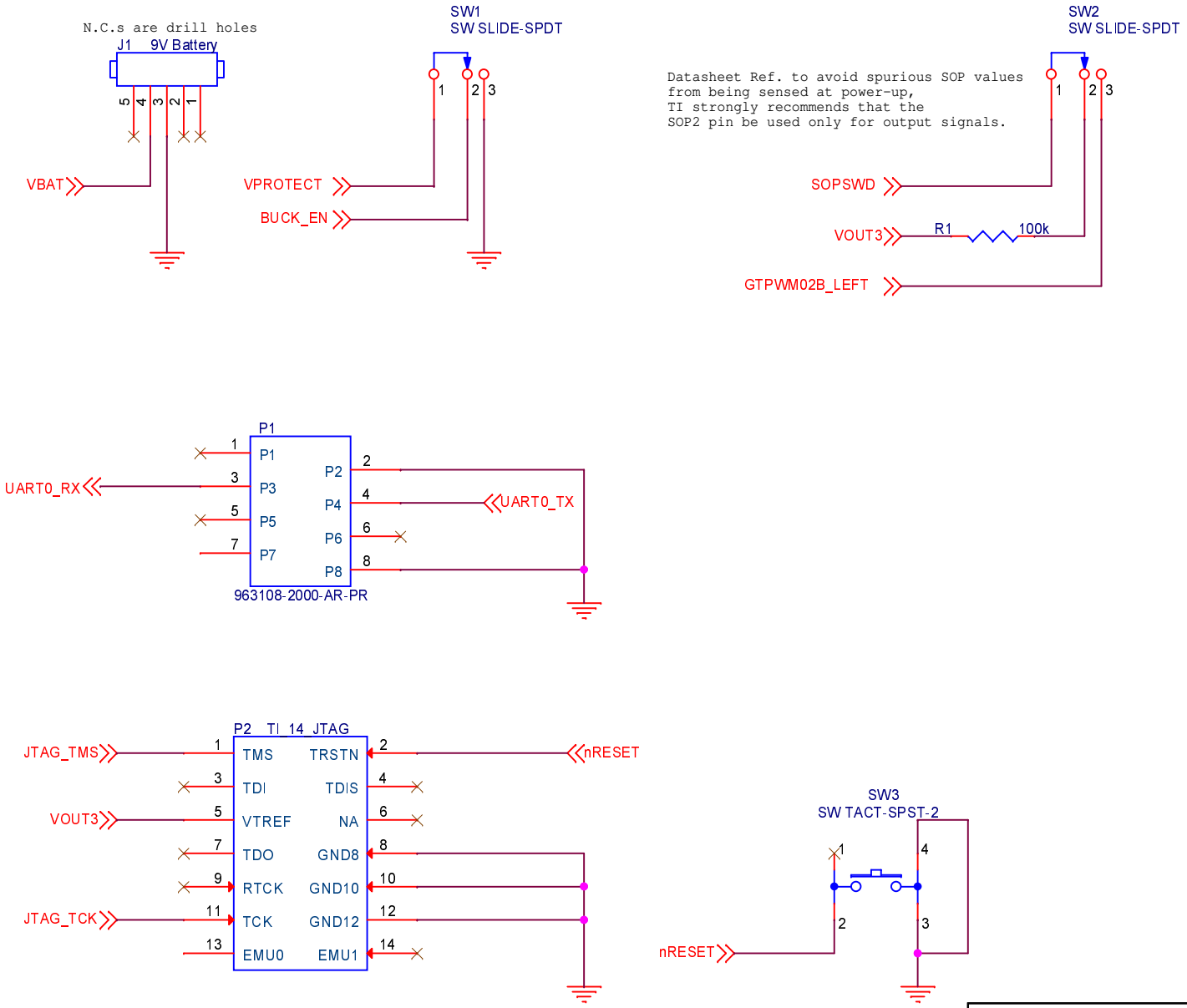

Title	<Title>	
Size A	Document Number <Doc>	Rev <RevCode>
Date: Wednesday, January 04, 2017	Sheet 2 of 4	

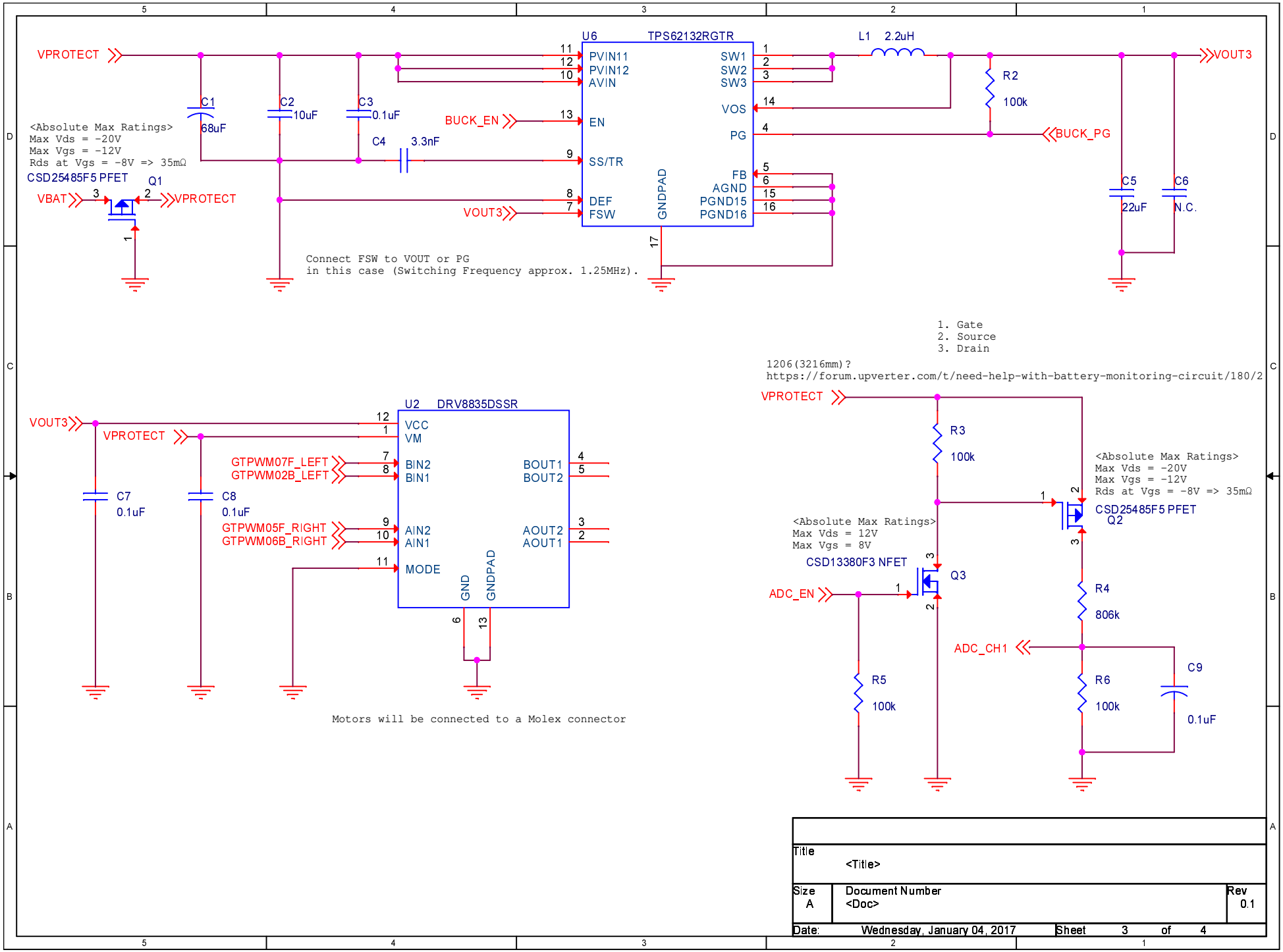

Title	<Title>	
Size A	Document Number <Doc>	Rev 0.1
Date: Wednesday, January 04, 2017	Sheet 3 of 4	

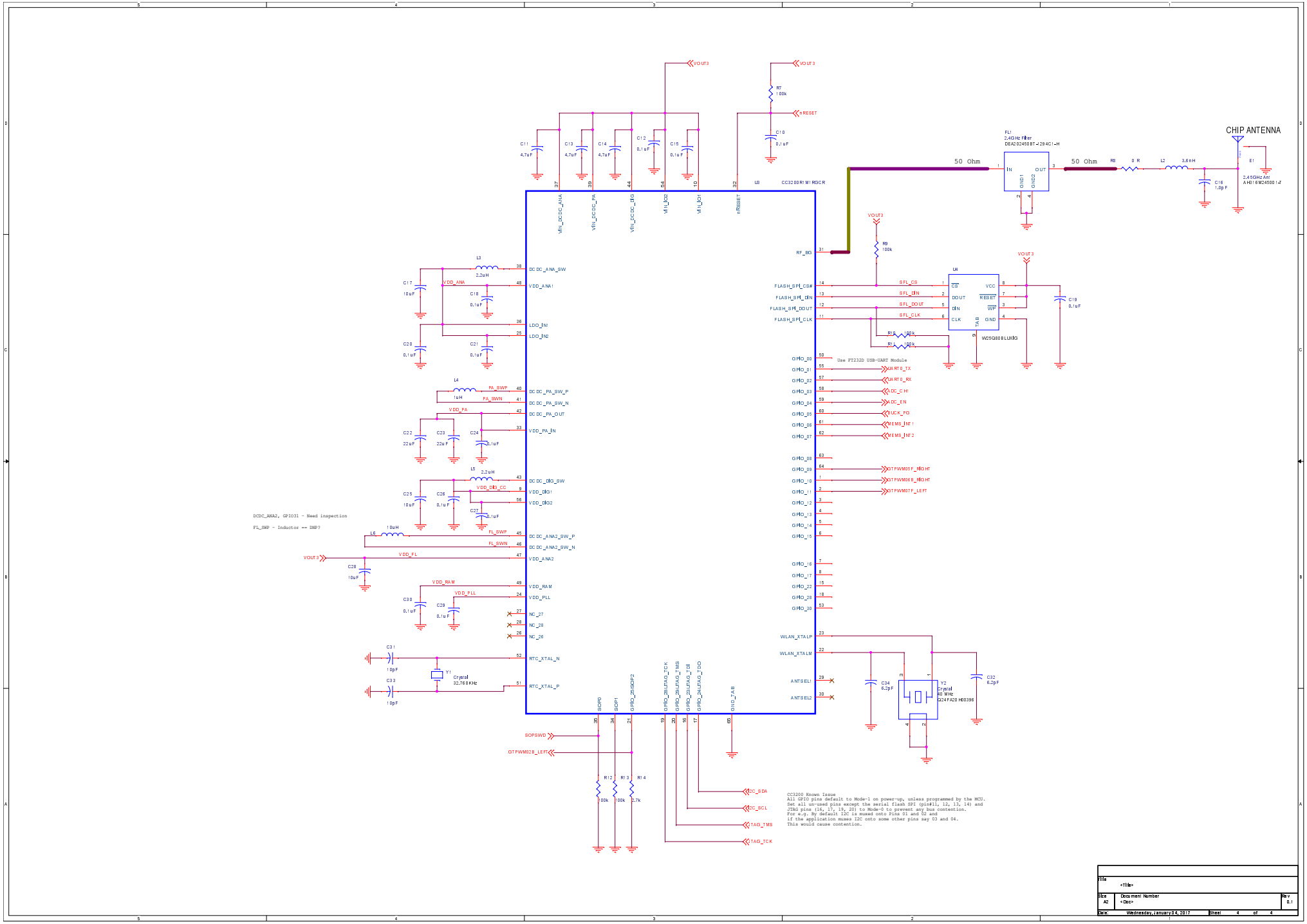
VOUT3
R7
100k
nRESET
C10
0.1uF
C11
4.7uF
C13
4.7uF
C14
4.7uF
C12
0.1uF
C15
0.1uF
U3
CC3200RMIRGCR
VIN_DCDC_ANA
VIN_DCDC_PA
VIN_DCDC_DIG
VIN_IO2
VIN_IO1
nRESET
RF_BG
R9
100k
FL1
2.4GHz Filter
DEA202450BT-2294C1-H
IN
OUT
GND1
GND2
50 Ohm
50 Ohm
R8
0 R
L2
3.6nH
C16
1.0pF
CHIP ANTENNA
E1
2.45GHz Ant
AH316M245001-T
U4
CS
DOUT
DIN
CLK
VCC
RESET
WP
GND
PAD
W25Q80BLUXIG
C19
0.1uF
SFL_CS
SFL_DIN
SFL_DOUT
SFL_CLK
R10
100k
R11
100k
FLASH_SPI_CS#
FLASH_SPI_DIN
FLASH_SPI_DOUT
FLASH_SPI_CLK
L3
2.2uH
C17
10uF
C18
0.1uF
VDD_ANA
C20
0.1uF
C21
0.1uF
DC_DC_ANA_SW
VDD_ANA1
LDO_IN1
LDO_IN2
L4
1uH
PA_SWP
PA_SWN
DC_DC_PA_SW_P
DC_DC_PA_SW_N
DC_DC_PA_OUT
VDD_PA
VDD_PA_IN
C22
22uF
C23
22uF
C24
0.1uF
L5
2.2uH
DC_DC_DIG_SW
VDD_DIG_CC
VDD_DIG1
VDD_DIG2
C25
10uF
C26
0.1uF
C27
0.1uF
L6
10uH
FL_SWP
FL_SWN
DC_DC_ANA2_SW_P
DC_DC_ANA2_SW_N
VDD_ANA2
VDD_FL
C28
10uF
VDD_RAM
VDD_PLL
C30
0.1uF
C29
0.1uF
VDD_RAM
VDD_PLL
NC_27
NC_28
NC_26
C31
10pF
C33
10pF
Y1
Crystal
32.768KHz
RTC_XTAL_N
RTC_XTAL_P
SOPS0
SOPS1
GPIO_25/SOP2
GPIO_28/JTAG_TCK
GPIO_29/JTAG_TMS
GPIO_23/JTAG_TDI
GPIO_24/JTAG_TDO
GND_PAD
SOPSWD
GTPWM02B_LEFT
R12
100k
R13
100k
R14
2.7k
I2C_SDA
I2C_SCL
TAG_TMS
TAG_TCK
GPIO_00
GPIO_01
GPIO_02
GPIO_03
GPIO_04
GPIO_05
GPIO_06
GPIO_07
GPIO_08
GPIO_09
GPIO_10
GPIO_11
GPIO_12
GPIO_13
GPIO_14
GPIO_15
GPIO_16
GPIO_17
GPIO_22
GPIO_28
GPIO_30
Use FT232D USB-UART Module
UART0_TX
UART0_RX
DC_CHI
DC_EN
CLK_PG
MEMS_INT1
MEMS_INT2
GTPWM05F_RIGHT
GTPWM06B_RIGHT
GTPWM07F_LEFT
WLAN_XTALP
WLAN_XTALM
ANTSEL1
ANTSEL2
C34
6.2pF
Y2
Crystal
80 MHz
Q24FA20H00396
C32
6.2pF
DCDC_ANA2, GPIO31 - Need inspection
FL_SWP - Inductor == DNP?
CC3200 Known Issue
All GPIO pins default to Mode-1 on power-up, unless programmed by the MCU.
Set all un-used pins except the serial flash SPI (pin#11, 12, 13, 14) and
JTAG pins (16, 17, 19, 20) to Mode-0 to prevent any bus contention.
For e.g. By default I2C is muxed onto Pins 01 and 02 and
if the application muxes I2C onto some other pins say 03 and 04.
This would cause contention.
File
<Title>
Size
A2
Document Number
<Doc>
Rev
0.1
Date:
Wednesday, January 04, 2017
Sheet
4
of
4