REV	CM#	DATE	CHECKED	DRAWING SHEET NO	REV	CM#	DATE	CHECKED	DRAWING SHEET NO

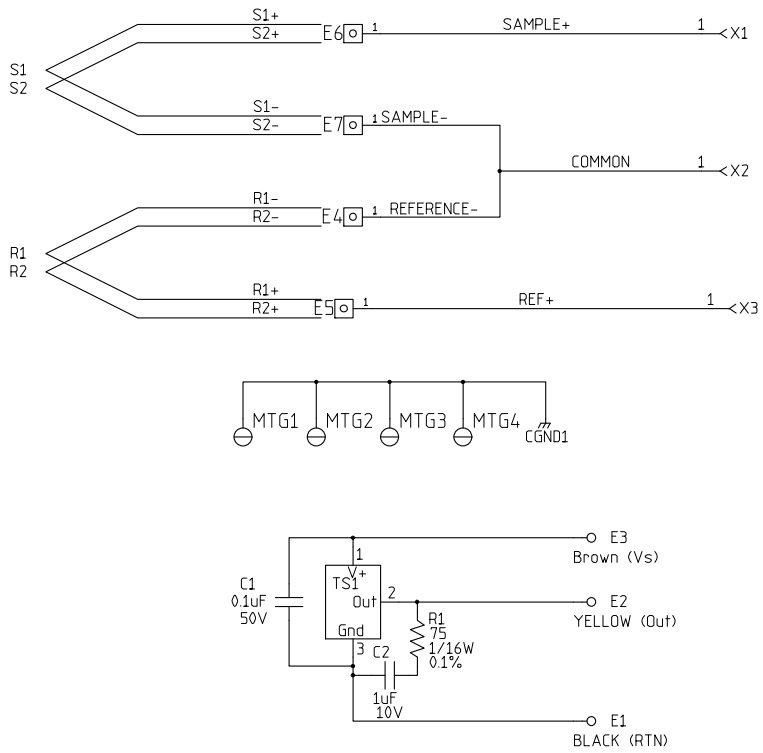

MATERIAL	SIGNATURES	DATE	TA Instruments-Waters,LLC 159 Lukens Drive New Castle, DE 19720
	DRAWN H. Kelley	20131114	
REFERENCE SPEC	APPROVED		TITLE MERCURY REFENCE JUNCTION
	ENGRG H. Kelley		
NEXT ASSY	MFG		SIZE C · DWG. NO. 963096 · REV 1
			SCALE · SHEET 1 OF 1