R1.2

DISPLAY PORT 1

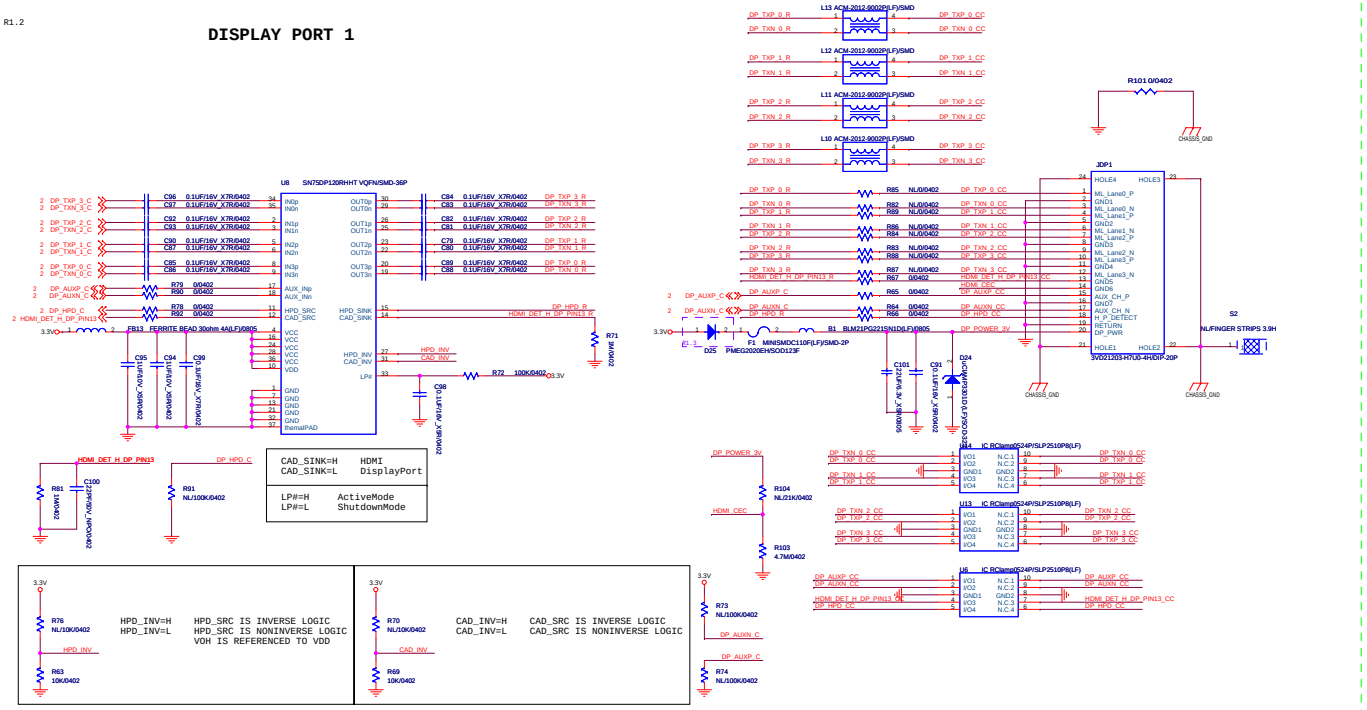

CAD_SINK=H	HDMI
CAD_SINK=L	DisplayPort
LP#=H	ActiveMode
LP#=L	ShutdownMode

3.3V			3.3V		
R76 NL/10K/0402	HPD_INV=H HPD_INV=L	HPD_SRC IS INVERSE LOGIC HPD_SRC IS NONINVERSE LOGIC VOH IS REFERENCED TO VDD	R70 NL/100K/0402	CAD_INV=H CAD_INV=L	CAD_SRC IS INVERSE LOGIC CAD_SRC IS NONINVERSE LOGIC
HPD_INV			CAD_INV		
R63 10K/0402			R69 10K/0402		

R1.2

DISPLAY PORT 2

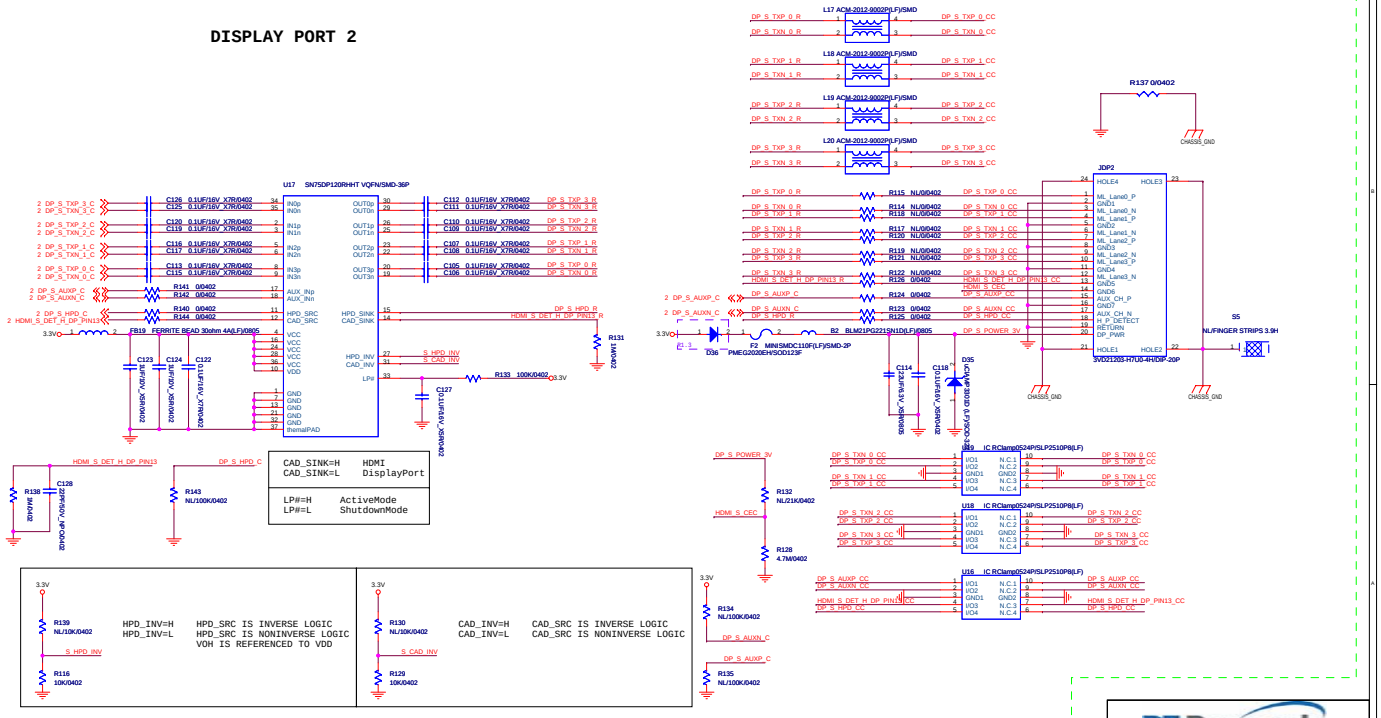

CAD_SINK=H	HDMI
CAD_SINK=L	DisplayPort
LP#=H	ActiveMode
LP#=L	ShutdownMode

3.3V			3.3V		
R139 NL/10K/0402	HPD_INV=H HPD_INV=L	HPD_SRC IS INVERSE LOGIC HPD_SRC IS NONINVERSE LOGIC VOH IS REFERENCED TO VDD	R130 NL/100K/0402	CAD_INV=H CAD_INV=L	CAD_SRC IS INVERSE LOGIC CAD_SRC IS NONINVERSE LOGIC
S_HPD_INV			S_CAD_INV		
R116 10K/0402			R120 10K/0402		

DT Research

Size	Document Number	Rev
Custom	DT398IB	1.3

Date: Wednesday, September 04, 2013 Sheet 4 of 6