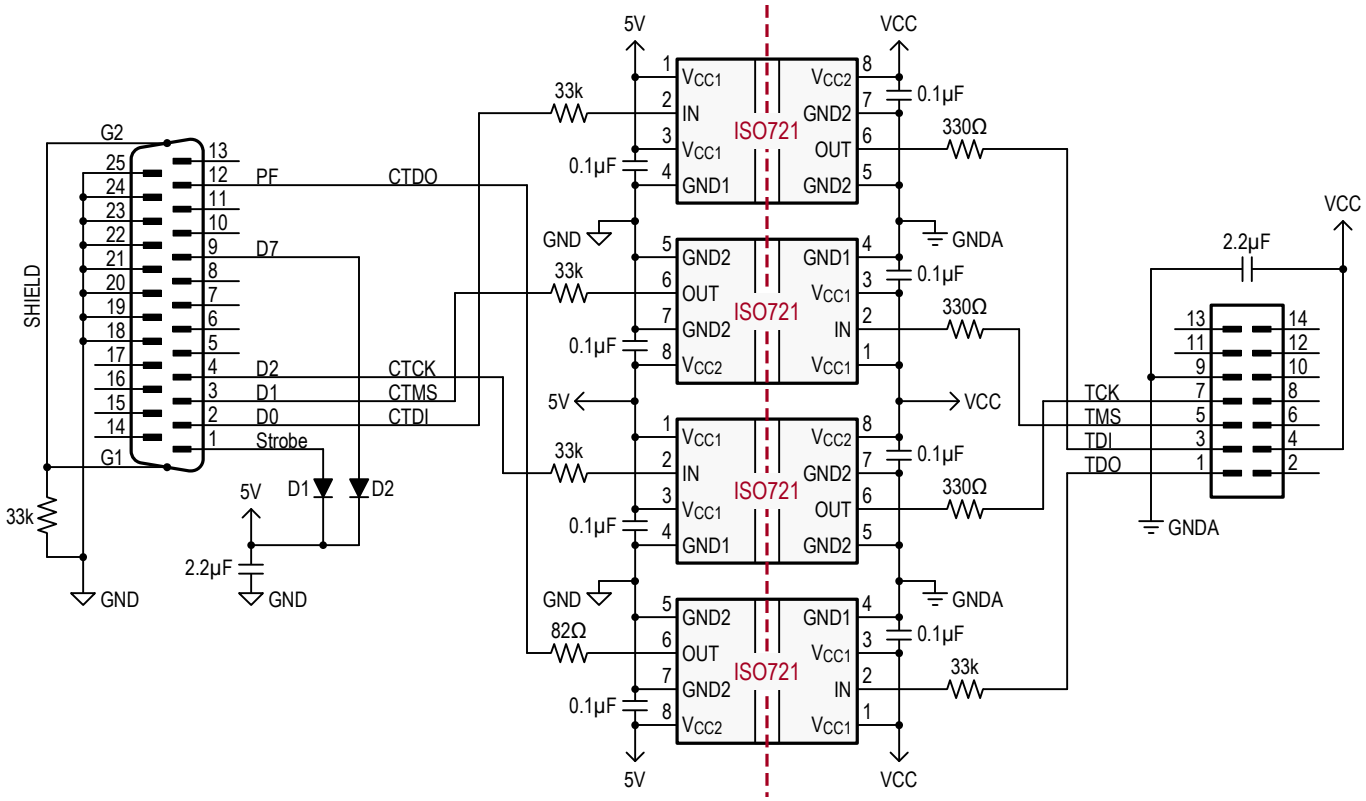
G2
G1
SHIELD
PF
D7
D2
D1
D0
Strobe
CTDO
CTCK
CTMS
CTDI
33k
2.2µF
GND
5V
D1
D2
ISO721
VCC1
IN
VCC1
GND1
VCC2
GND2
OUT
GND2
VCC2
GND1
VCC1
IN
VCC1
0.1µF
330Ω
82Ω
VCC
GNDA
TCK
TMS
TDI
TDO

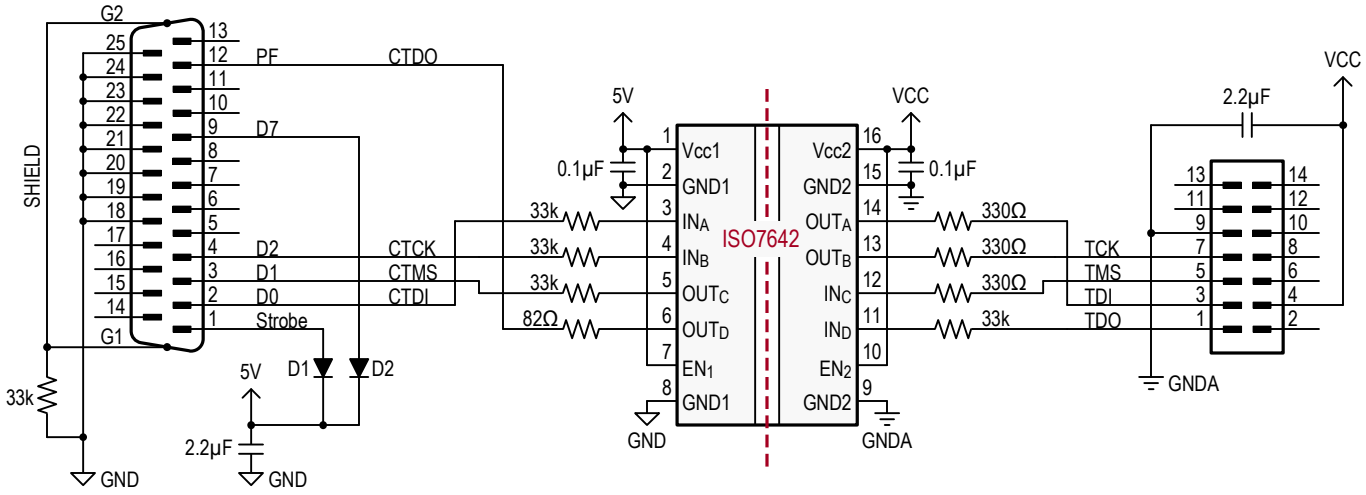
G2
G1
SHIELD
PF
D7
D2
D1
D0
Strobe
CTDO
CTCK
CTMS
CTDI
33k
2.2µF
GND
5V
D1
D2
ISO7642
Vcc1
GND1
INA
INB
OUTC
OUTD
EN1
GND1
Vcc2
GND2
OUTA
OUTB
INC
IND
EN2
GND2
0.1µF
330Ω
82Ω
VCC
GNDA
TCK
TMS
TDI
TDO