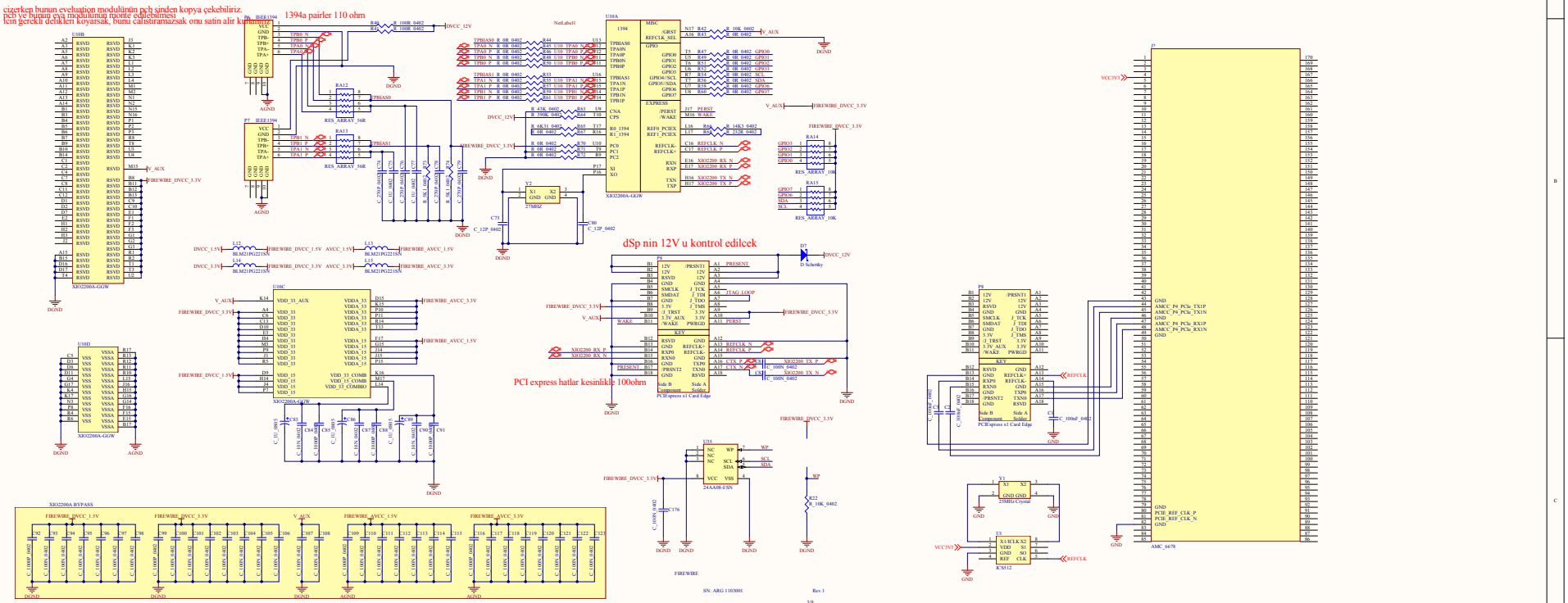

Title		
Size: A1	Number	Revision
Date: 18.07.2012		Sheet of
File: C:\Users\...\FIREWIRE.SchDoc		Drawn By: