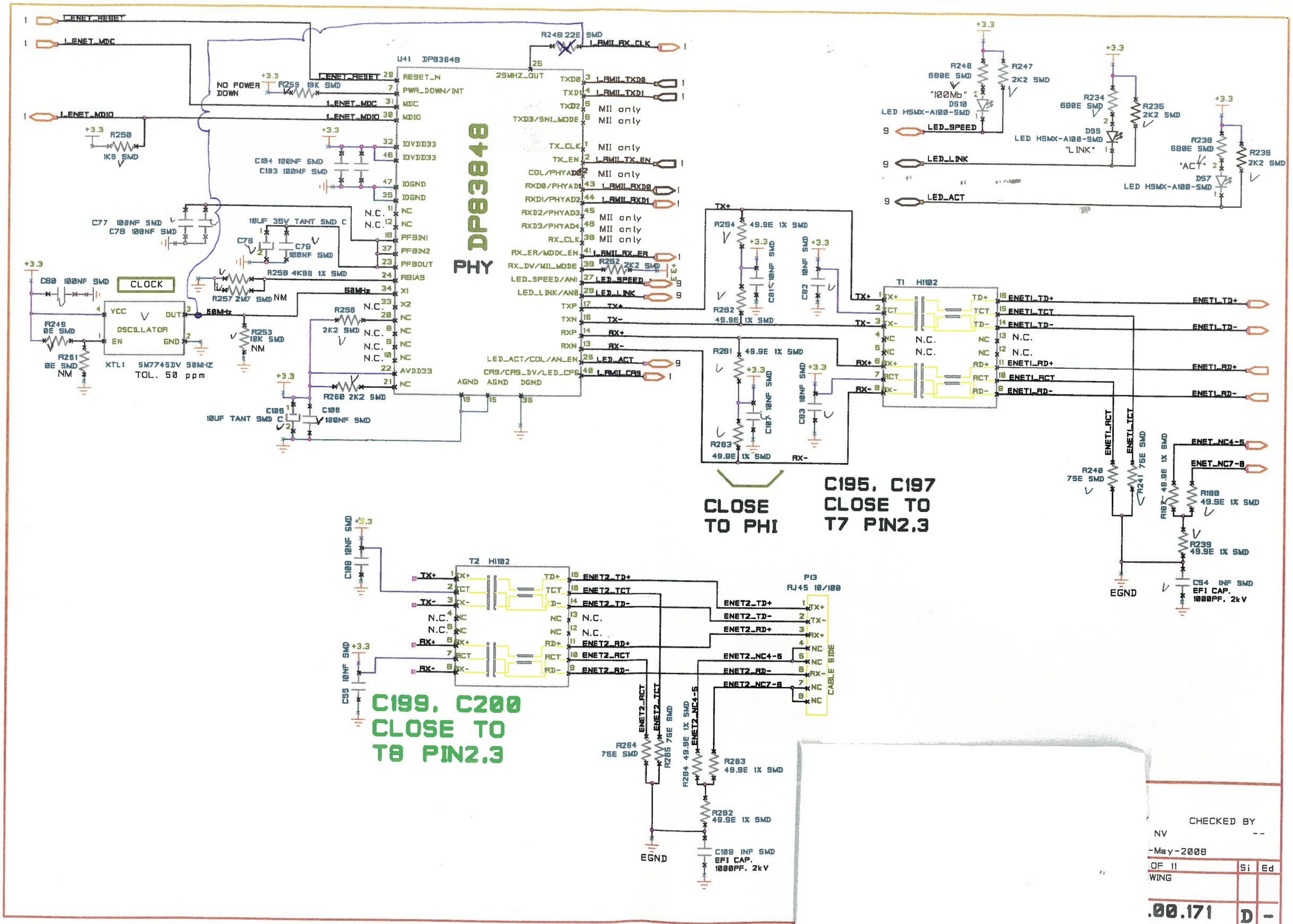
U41 DP83848
PHY
CLOCK
OSCILLATOR
XTL1 SM7745DV 50MHz
TOL. 50 ppm
NO POWER DOWN
MII only
T1 H1102
T2 H1102
P13
RJ45 10/100
CABLE SIDE
LED HSMX-A100-SMD
"100Mb"
"LINK"
"ACT"
EGND
CLOSE TO PHI
C195, C197 CLOSE TO T7 PIN2,3
C199, C200 CLOSE TO T8 PIN2,3
EFI CAP. 1000PF, 2kV
CHECKED BY
NV
-May-2008
OF 11
WING
.00.171
D