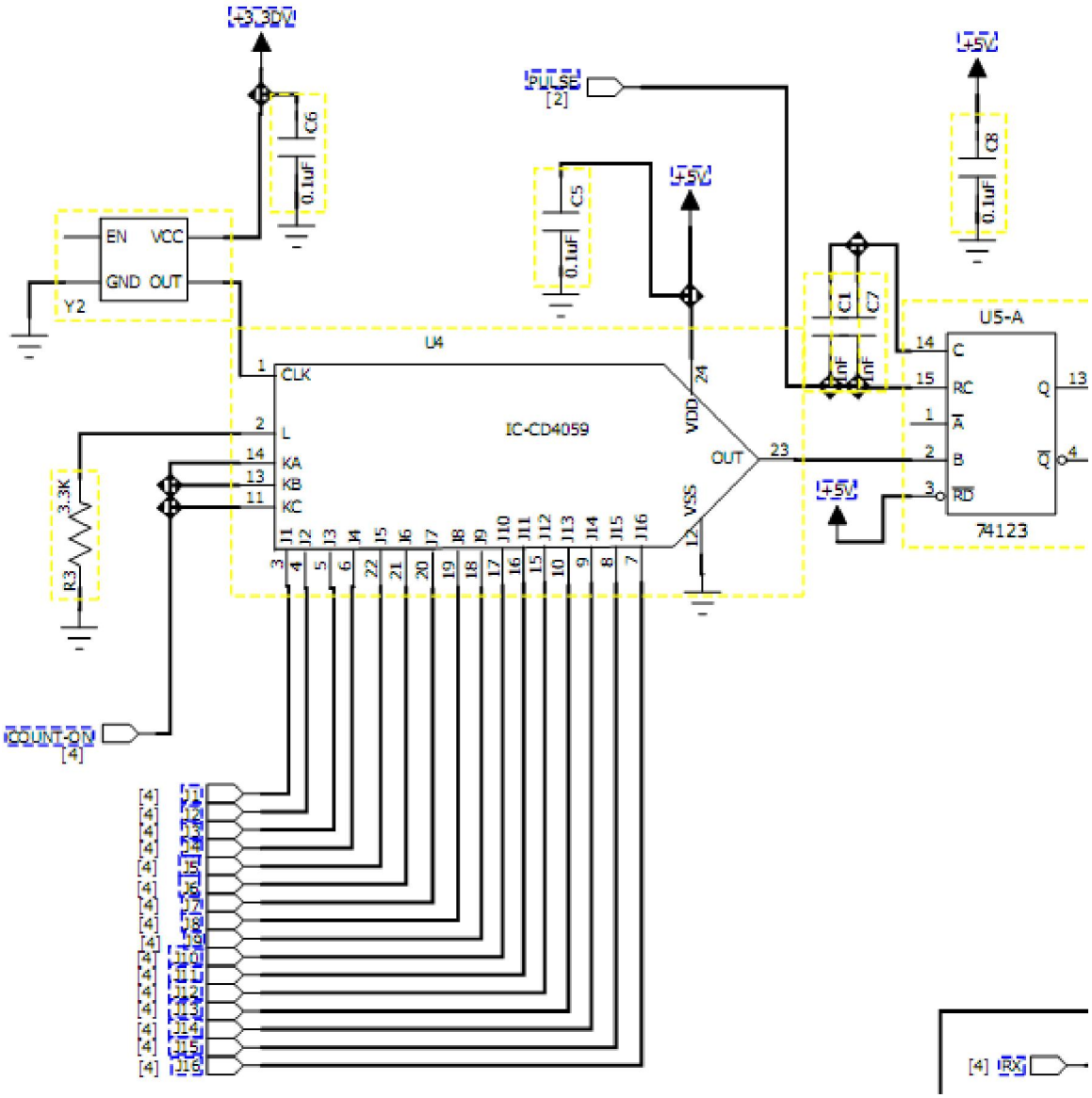
+3.3DV
C6
0.1uF
EN
VCC
GND
OUT
Y2
PULSE
[2]
C5
0.1uF
+5V
C8
0.1uF
C1
C7
1nF
1nF
U5-A
U4
CLK
L
KA
KB
KC
IC-CD4059
VDD
OUT
VSS
C
RC
A
B
RD
Q
74123
3.3K
R3
COUNT-OV
[4]
[4] RX