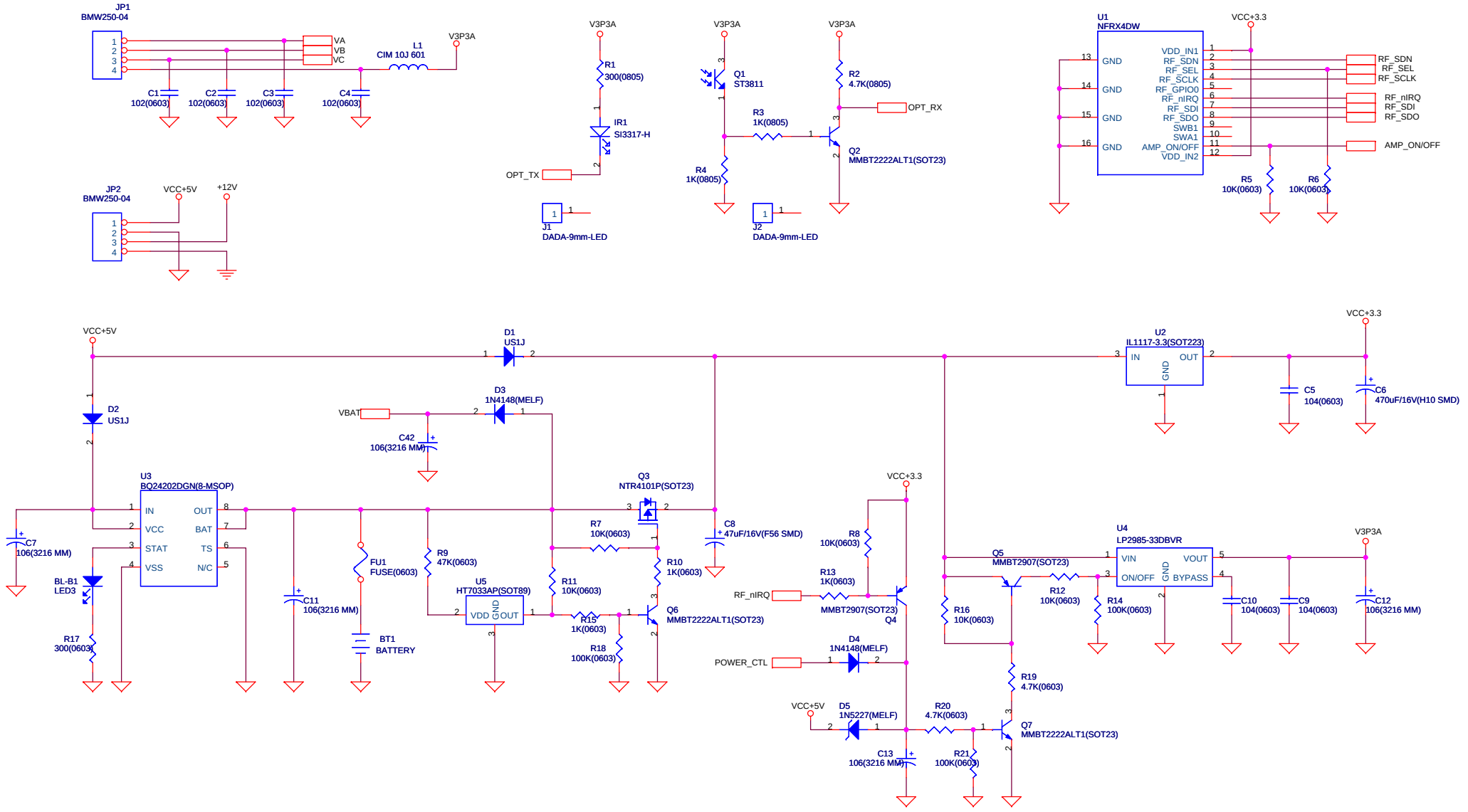

Title	Static Meter for Low Voltage 220V_CL 1.0	
Size A3	Document Number Battery Li-Ion Charge	Rev 0.9
Date: Saturday, April 21, 2012	Sheet 1 of 2	