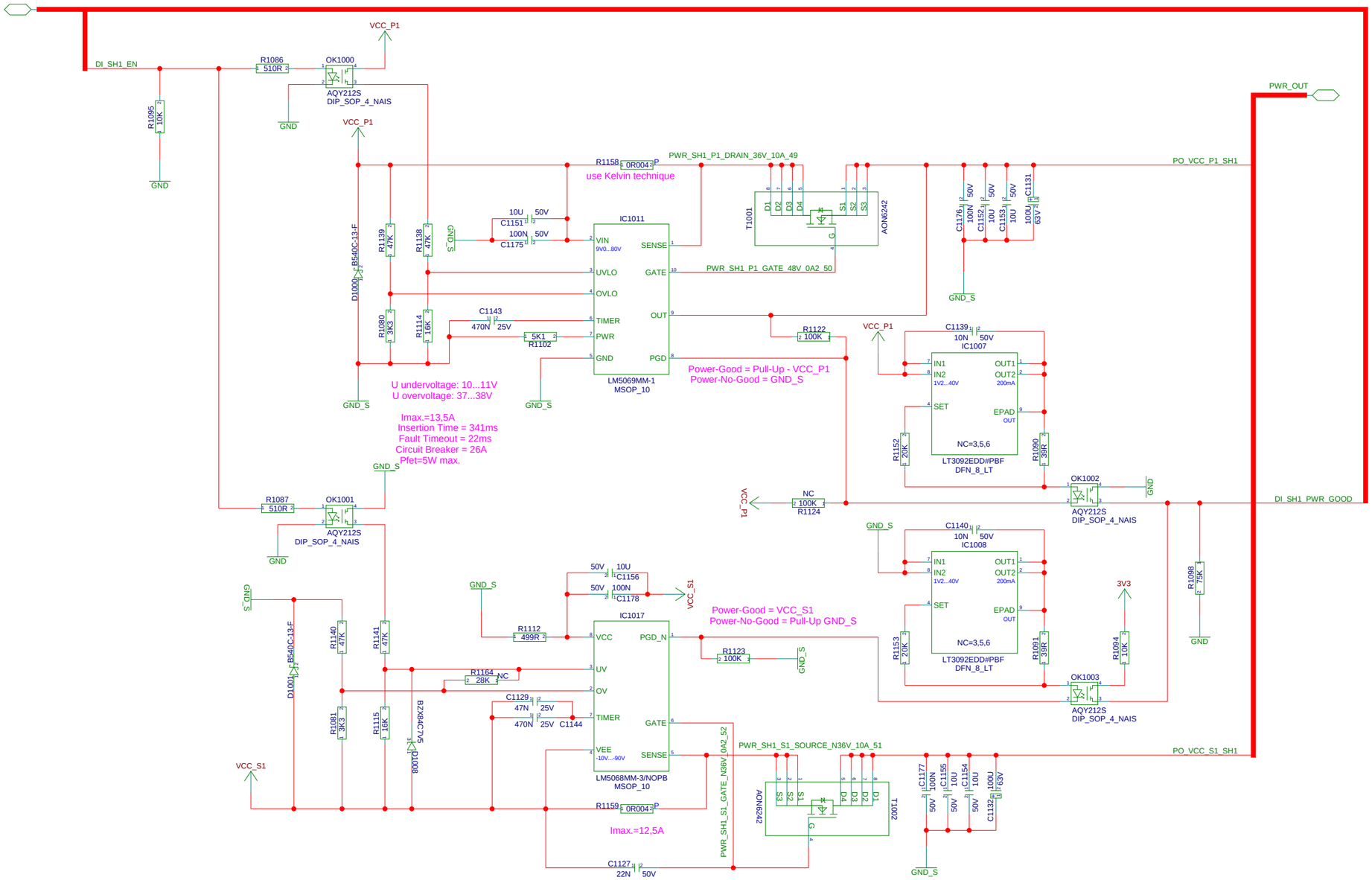
DI_SH1_EN
R1095 10K
GND
R1086 510R
OK1000
AQY212S
DIP_SOP_4_NAIS
VCC_P1
PWR_OUT
R1158 0R004
use Kelvin technique
PWR_SH1_P1_DRAIN_36V_10A_49
PO_VCC_P1_SH1
IC1011
VIN
9V0...80V
SENSE
UVLO
GATE
OVLO
TIMER
OUT
PWR
GND
PGD
LM5069MM-1
MSOP_10
PWR_SH1_P1_GATE_48V_0A2_50
T1001
AON6242
C1151 10U 50V
C1175 100N 50V
GND_S
R1139 47K
R1138 47K
D1000 B540C-13-F
R1080 3K3
R1114 16K
C1143 470N 25V
5K1 R1102
R1122 100K
Power-Good = Pull-Up - VCC_P1
Power-No-Good = GND_S
U undervoltage: 10...11V
U overvoltage: 37...38V
Imax.=13,5A
Insertion Time = 341ms
Fault Timeout = 22ms
Circuit Breaker = 26A
Pfet=5W max.
C1176 100N 50V
C1152 10U 50V
C1153 10U 50V
C1131 100U 63V
C1139 10N 50V
IC1007
IN1
IN2
1V2...40V
OUT1
OUT2
200mA
SET
EPAD
OUT
NC=3,5,6
LT3092EDD#PBF
DFN_8_LT
R1152 20K
R1090 39R
OK1002
AQY212S
DIP_SOP_4_NAIS
DI_SH1_PWR_GOOD
R1087 510R
OK1001
NC
100K
R1124
C1140 10N 50V
IC1008
R1153 20K
R1091 39R
OK1003
3V3
R1094 10K
R1098 75K
C1156 10U 50V
C1178 100N 50V
VCC_S1
IC1017
VCC
PGD_N
UV
OV
TIMER
GATE
VEE
-10V...-90V
SENSE
LM5068MM-3/NOPB
MSOP_10
R1112 499R
R1123 100K
R1164 28K NC
C1129 47N 25V
470N 25V C1144
R1140 47K
R1141 47K
R1081 3K3
R1115 16K
BZX84C7V5
D1008
D1001 B540C-13-F
R1159 0R004
Imax.=12,5A
C1127 22N 50V
PWR_SH1_S1_GATE_N36V_0A2_52
PWR_SH1_S1_SOURCE_N36V_10A_51
PO_VCC_S1_SH1
T1002
C1177 100N 50V
C1155 10U 50V
C1154 10U 50V
C1132 100U 63V
U undervoltage: 10...11V
U overvoltage: 37...38V
Imax.=12,5A
Insertion Time = 340ms
Fault Timeout = 8,5ms
Circuit Breaker = 50A