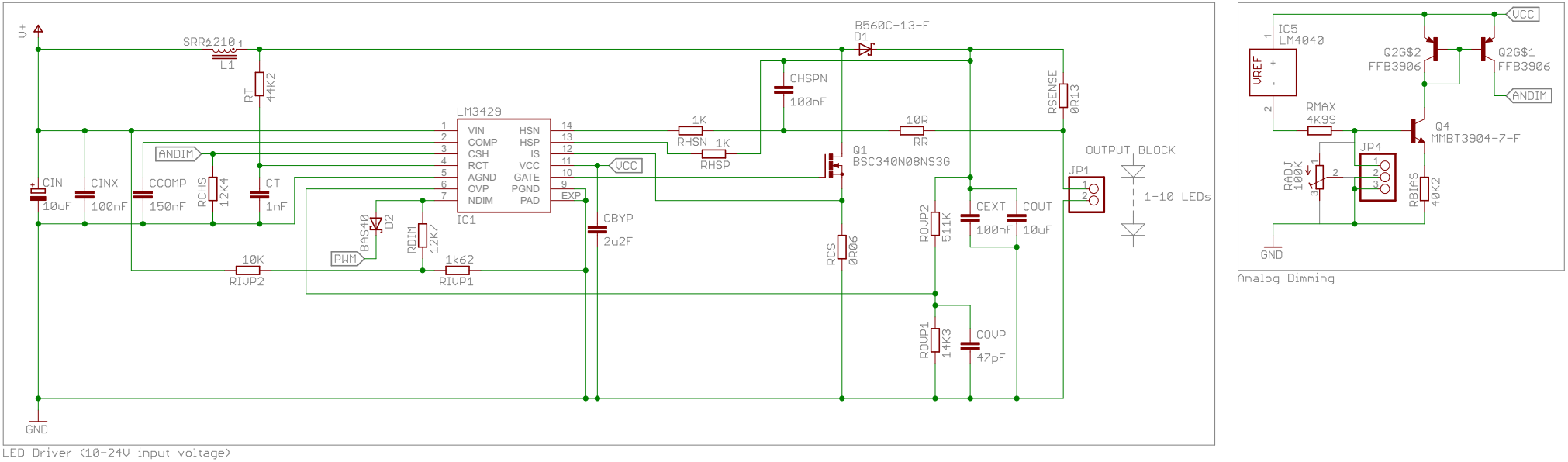

LED Driver (10-24V input voltage)

Analog Dimming