Input voltage is

6.0V - 8.4V

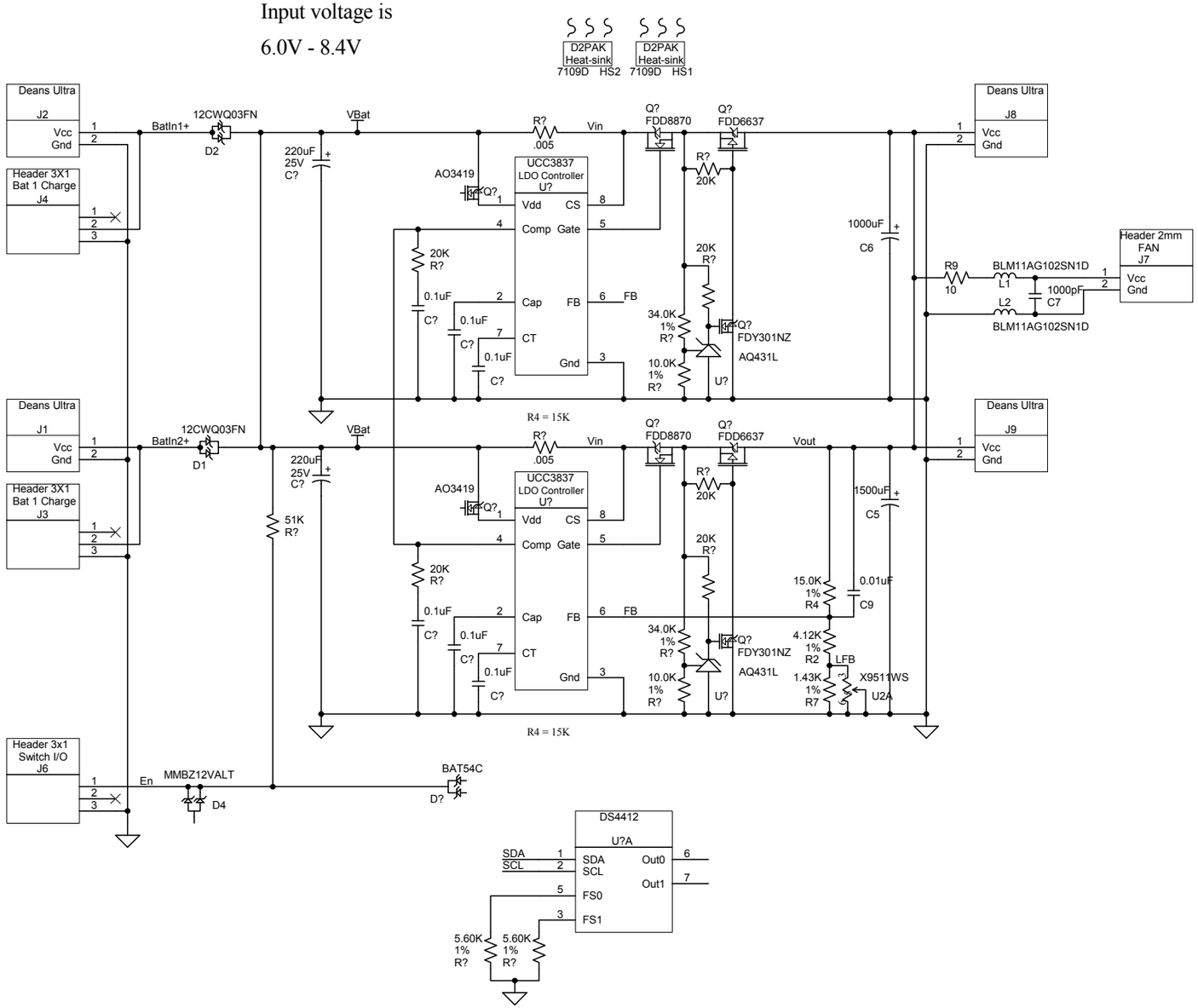

Output voltage is

5.2V - 6.5V

Proprietary and Confidential

Quest Engineering & Development, Inc.

6125 South Ash Avenue, Suite B-8 Tempe, AZ 85283 Tel: (480) 460-2652 Fax: (480) 460-2653

Title **R/C Switching Supply**	File Last Modified: Date: Time:
	File Printed: Date: 8-Sep-2010 Time: 06:51:56
Drawing: RCSw01	Revision: X
File: RCVR23x.PRJ	Designer:
	Sheet 1 of 1