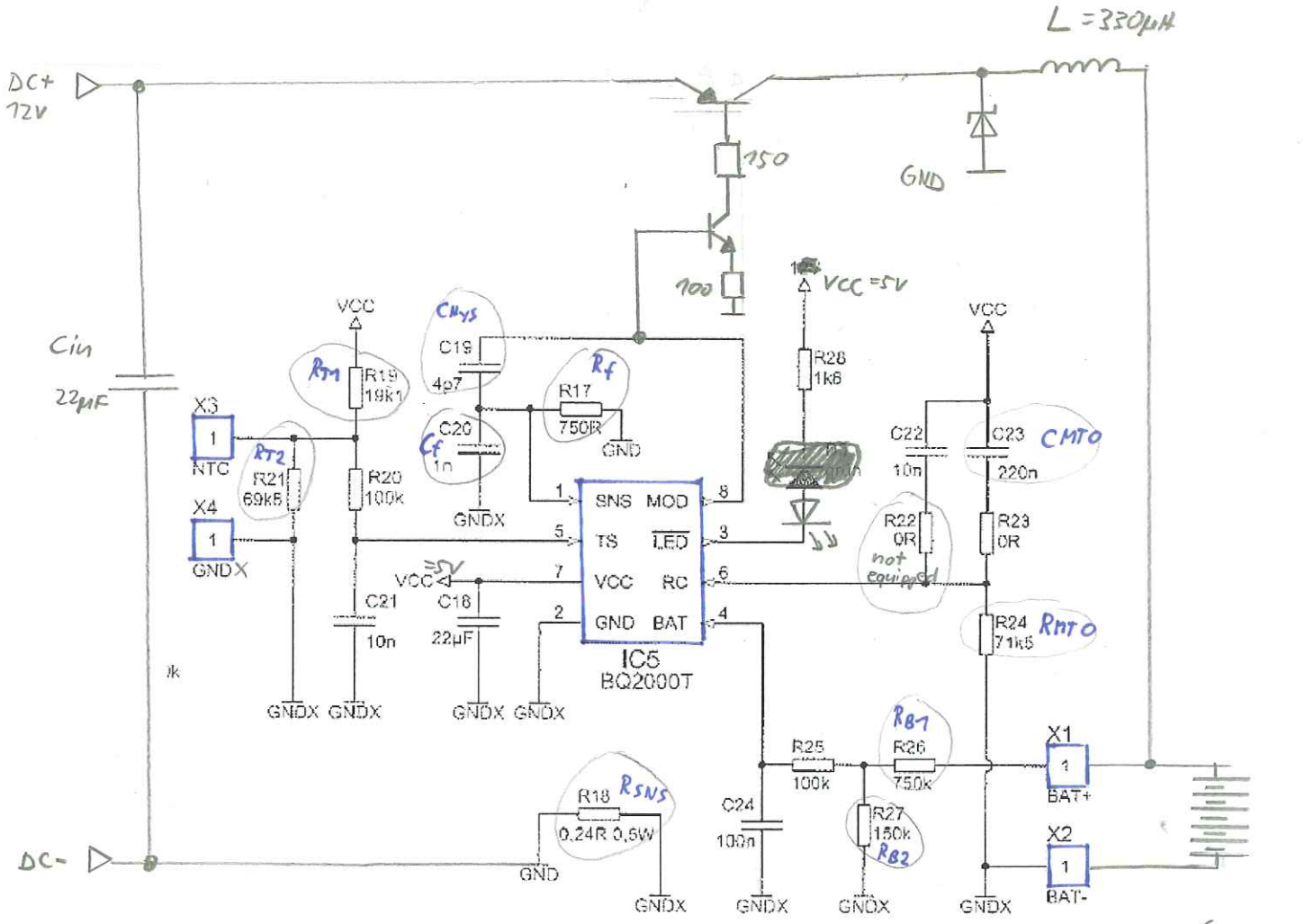
L = 330µH
DC+
12V
150
GND
100
VCC = 5V
VCC
Cin
22µF
C19
4p7
CHYS
R19
19k1
RT1
R17
750R
Rf
C20
1n
Cf
X3
NTC
RT2
R21
69k5
R20
100k
GNDX
X4
GNDX
R28
1k6
C22
10n
C23
220n
CMTO
R22
0R
not equipped
R23
0R
SNS
MOD
TS
LED
VCC
RC
GND
BAT
IC5
BQ2000T
C21
10n
C18
22µF
R24
71k5
RMTO
R25
100k
R26
750k
RB1
R27
150k
RB2
C24
100n
R18
0,24R 0,5W
RSNS
X1
BAT+
X2
BAT-
DC-
6pcs.
NiMH
2000mAh